CONVOTHERM®
A Welbilt Brand

Combi oven

Read instructions before use

Convotherm 4

Installation manual - Original, ENG

Table of Contents

1 General 6

1.1 Environmental protection 6
1.2 Identifying your combi oven 7
1.3 Structure of customer documentation 9
1.4 Essential reading relating to safety 10
1.5 About this installation manual 11

2 Design and function 13

2.1 Design and function of the combi oven 13
2.2 Layout and function of the operating panel 19

3 For your safety 20

3.1 Basic safety code 20
3.2 Intended use of your combi oven 22
3.3 Warning signs on the combi oven for table-top units 23
3.4 Warning signs on the combi oven for floor-standing units 25
3.5 Hazards and safety precautions when moving the appliance 27
3.6 Hazards and safety precautions when setting up the appliance 28
3.7 Hazards and safety precautions during installation 29
3.8 Hazards and safety precautions when putting the appliance into service 31
3.9 Hazards and safety precautions when removing the appliance from service 34
3.10 Safety devices 37
3.11 Requirements to be met by personnel, working positions 41
3.12 Personal protective equipment 43

4 Moving the appliance 44

4.1 Working safely with the appliance 44
4.2 Moving the appliance to the installation location 45

5 Setting up the appliance 46

5.1 Safe working when setting up the appliance 46
5.2 Adjacent systems 47
5.3 Requirements for the installation location 48
5.4 Unpacking 53
5.5 Taking the appliance off the pallet 57
5.6 Setting up a table-top unit on a work surface (standard model) 60
5.7 Setting up a table-top unit on a work surface (marine model) 62
5.8 Setting up a table-top unit on a stand (standard model) 65
5.9 Setting up a table-top unit on a stand (marine model) 67
5.10 Setting up a table-top unit on a wheeled stand 71
5.11 Setting up a floor-standing unit on the floor (standard model) 74
5.12 Setting up a floor-standing unit on the floor (marine model) 75

6 Installation 76

6.1 Electrical installation 76
6.1.1 Safe working during electrical installation 76
6.1.2 Planning the electrical installation 77
6.1.3 Carrying out the electrical installation 79
6.1.4 Connection to an energy optimization system (electric appliances only) 80
6.1.5 Connecting the signal tower 82

6.1.6 Connecting the water-treatment filter monitor 84
6.2 Gas installation 86
6.2.1 Safe working when installing the gas 86
6.2.2 Planning the gas installation 88
6.2.3 Positions of the fan burners and main gas valve 90
6.2.4 Installing the gas 92
6.2.5 Measuring the supply flow pressure 93
6.2.6 Measuring the exhaust gas values 94
6.3 Water connection 95
6.3.1 Safe working when connecting the water supply and the drain 95
6.3.2 Water supply 96
6.3.3 Test the water quality 100
6.3.4 Drain connection 101
6.4 Installing the fully automatic oven cleaning system 103
6.4.1 Safe working during the installation 103
6.4.2 Layout of the fully automatic oven cleaning system 104
6.4.3 Connecting the fully automatic oven cleaning system 106
6.5 Installing the grease collecting canister (applies to ConvoGrill only) 108
6.5.1 Safe working during the installation 108
6.5.2 Connecting the grease collecting canister 109

7 Putting into service 110

7.1 Safe working when putting the appliance into service 110
7.2 Procedure for putting the appliance into service 114
7.3 Measuring appliance gaps 116

8 Removal from service and disposal 117

8.1 Safe working when removing the appliance from service 117
8.2 Removal from service and disposal 119

9 Technical data 120

9.1 Dimensions and weights 121
9.2 Maximum permissible loading weight 123
9.3 Electrical supply 124
9.4 Gas specification, natural gas 2H (E), natural gas 2L (LL), propane 3P, liquefied gas 3B/P 132
9.5 Gas specification, natural gas (AUS/NZL), propane (AUS/NZL) 132
9.6 Gas specification, natural gas (JPN), propane (JPN) 133
9.7 Gas specification, natural gas 13A (KOR), propane (KOR) 133
9.8 Gas consumption 134
9.9 Exhaust gas output rate 134
9.10 Heat output 135
9.11 Dissipated heat 136
9.12 Water connection 136
9.13 Water quality 137
9.14 Boiler 138
9.15 Water consumption, cooking 138
9.16 Water consumption, cooking and cleaning 139

10 Connection diagrams 140

10.1 Dimensions and connection points for electric appliances 141
10.1.1 Convotherm 4 6.10 electric appliance 142
10.1.2 Convotherm 4 6.20 electric appliance 144
10.1.3 Convotherm 4 10.10 electric appliance 146

10.1.4 Convotherm 4 10.20 electric appliance 148
10.1.5 Convotherm 4 12.20 electric appliance 150
10.1.6 Convotherm 4 20.10 electric appliance 152
10.1.7 Convotherm 4 20.20 electric appliance 154
10.2 Dimensions and connection points for gas appliances 156
10.2.1 Convotherm 4 6.10 boiler gas appliance 157
10.2.2 Convotherm 4 6.10 injection gas appliance 159
10.2.3 Convotherm 4 6.20 boiler gas appliance 161
10.2.4 Convotherm 4 6.20 injection gas appliance 163
10.2.5 Convotherm 4 10.10 boiler gas appliance 165
10.2.6 Convotherm 4 10.10 injection gas appliance 167
10.2.7 Convotherm 4 10.20 boiler gas appliance 169
10.2.8 Convotherm 4 10.20 injection gas appliance 171
10.2.9 Convotherm 4 12.20 boiler gas appliance 173
10.2.10 Convotherm 4 12.20 injection gas appliance 175
10.2.11 Convotherm 4 20.10 boiler gas appliance 177
10.2.12 Convotherm 4 20.10 injection gas appliance 179
10.2.13 Convotherm 4 20.20 boiler gas appliance 181
10.2.14 Convotherm 4 20.20 injection gas appliance 183

11 Checklists and completion of installation 185

11.1 Checklist: moving, setting up and installing the appliance 185
11.2 Checklist: Safety devices and warnings 187
11.3 Checklist: Customer guidance and instruction 188
11.4 Completion of the installation 189

1 General

Purpose of this chapter

This chapter shows you how to identify your combi oven and provides guidance on using this manual.

1.1 Environmental protection

Statement of principles

Our customers' expectations, the legal regulations and standards and our company's own reputation set the quality and service for all our products.

We have an environmental management policy that not only ensures compliance with all environmental regulations and laws, but also commits us to continuous improvement of our green credentials.

We have developed a quality and environmental-management system in order to guarantee the continued manufacture of high-quality products, and to be sure of meeting our environmental targets.

This system satisfies the requirements of ISO 9001:2008 and ISO 14001:2004.

Environmental protection procedures

We observe the following procedures:

- Use of residue-free compostable wadding materials
- Use of RoHS-compliant products
- REACH chemical law
- Recommendation and use of bio-degradable cleaning agents
- Recycling of electronic waste
- Environmentally friendly disposal of old appliances via the manufacturer

Join us in our commitment to protect the environment.

1.2 Identifying your combi oven

Position of type plate

The type plate is located on the left-hand side of the combi oven.

Layout and structure of the type plate on electric appliances

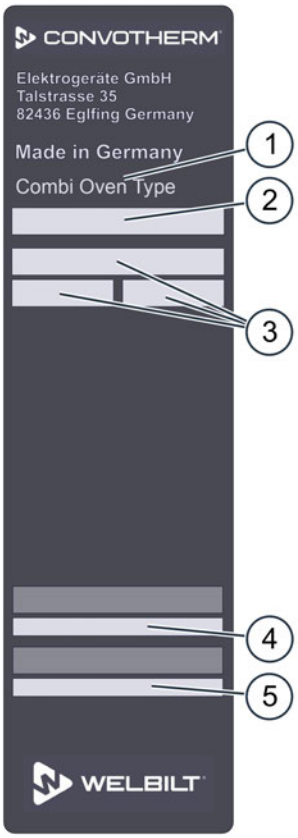

Item	Name	
1	**Name of appliance** Combi Oven	
2	**Trade name**	
	Element	Meaning
	C4	Convotherm 4 appliance series
	eT	easyTouch controls
	eD	easyDial controls
	numbers xx.yy	Appliance size
	EB	Electric appliance with boiler
	ES	Electric appliance with water injection
	-N	for appliances with an NSK certificate
3	**Electrical values**	
4	**Serial number**	
	Element	Meaning
	Heating method	Electric appliance (X, V)
	Steam generation method	▪ Injection (S) ▪ Boiler (B)
	Appliance size	▪ 6.10 (1) ▪ 6.20 (2) ▪ 10.10 (3) ▪ 10.20 (4) ▪ 12.20 (5) ▪ 20.10 (6) ▪ 20.20 (7)
	Year of manufacture	▪ 2014 (14) ▪ 2015 (15) ▪ ...
	Month of manufacture	▪ January (01) ▪ February (02) ▪ March (03) ▪ ...
	Sequential number	4 digits
5	**Part number**	

Layout and structure of the type plate on gas appliances

Type plate

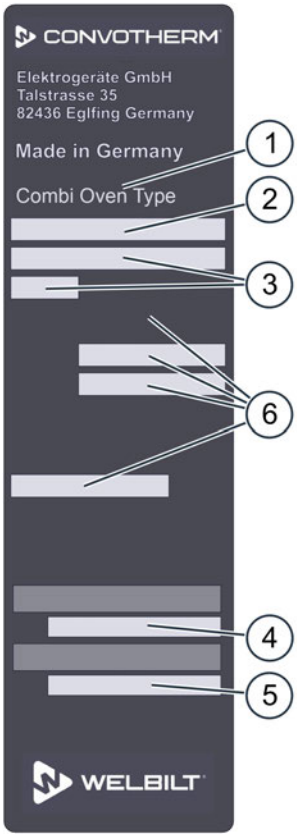

Additional plate

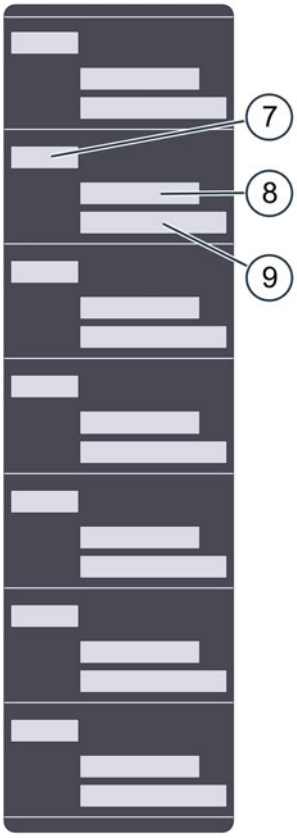

	Name	
1	**Name of appliance** Combi Oven	
2	**Trade name**	
	Element	Meaning
	C4	Convotherm 4 appliance series
	eT	easyTouch controls
	eD	easyDial controls
	numbers xx.yy	Appliance size
	GB	Gas appliance with boiler
	GS	Gas appliance with water injection
	-N	for appliances with an NSK certificate
3	**Electrical values**	
4	**Serial number**	
	Element	Meaning
	Heating method	Gas appliance (Y, W)
	Steam generation method	▪ Injection (S) ▪ Boiler (B)
	Appliance size	▪ 6.10 (1) ▪ 6.20 (2) ▪ 10.10 (3) ▪ 10.20 (4) ▪ 12.20 (5) ▪ 20.10 (6) ▪ 20.20 (7)
	Year of manufacture	▪ 2014 (14) ▪ 2015 (15) ▪ ...
	Month of manufacture	▪ January (01) ▪ February (02) ▪ March (03) ▪ ...
	Sequential number	4 digits
5	**Part number**	
6	**Gas data**	
7	**Country ID**	
8	**Gas category**	
9	**Gas factory setting for the appliance**	

1.3 Structure of customer documentation

Contents of customer documentation

The customer documentation for the combi oven includes the following documents:
- Installation manual (this document)
- User manual
- easyTouch operating instructions (extract from the on-screen Help)
- On-screen Help integrated in easyTouch (full instructions on how to use the software)
- easyDial operating instructions

Topics in the installation manual

The installation manual is intended for trained professional staff; see 'Requirements to be met by personnel' on page 41 in the installation manual.

It contains the following topics:

- **Design and function**: describes the components relevant to installing the combi oven
- **Safety**: describes all the hazards and appropriate preventive measures relevant to installation tasks
- **Moving the appliance**: contains necessary information on moving the combi oven
- **Setting up the appliance**: lists and describes the options for setting up the combi oven
- **Installation**: describes all the supply connections that are needed
- **Putting into service**: describes how to prepare the combi oven for use for the first time
- **Removal from service**: describes the tasks that need to be performed at the end of the combi oven life cycle
- **Technical data, connection diagrams**: contains all the relevant technical information for the combi oven
- **Checklists**: contains checklists for installing the combi oven in compliance with the warranty

Topics in the user manual

The user manual is intended for trained staff and trained professional staff; see 'Requirements to be met by personnel' in the user manual.

It contains the following topics:

- **Design and function**: describes the components relevant to operating the combi oven
- **Safety**: describes all the hazards and appropriate preventive measures relevant to operating the combi oven
- **Cooking**: describes the rules, working procedures, operating steps and appliance usage instructions for cooking
- **Cleaning**: lists and describes cleaning methods, cleaning agents, working procedures, operating steps and appliance usage instructions for cleaning
- **Servicing**: contains warranty information, the servicing schedule, information about faults, errors and emergency use, plus working procedures, operating steps and appliance usage instructions for servicing

Topics in the operating instructions and the on-screen help (easyTouch only)

The operating instructions and the on-screen help (easyTouch only) are intended for suitably trained staff and qualified professional staff; see 'Requirements to be met by personnel' in the user manual. For easyTouch models, the operating instructions are an extract from the On-screen help.

The operating instructions and on-screen help (easyTouch only) include the following topics:

- **Layout of the user interface**: explains the combi oven user interface
- **Using the software**: contains instructions for entering and opening cooking profiles, for opening cleaning profiles, for starting cooking and cleaning processes; describes how to make settings and how to import and export data
- **Selected cooking profiles**: lists tried and tested cooking profiles

1.4 Essential reading relating to safety

Safety information in the customer documentation

Safety information relating to the combi oven appears only in the installation manual and the user manual.

The installation manual contains the safety information for the tasks covered by the manual and which are performed when moving, setting up and installing the appliance and when putting the appliance into service and removing the appliance from service.

The user manual contains the safety information for the tasks covered by the manual and which are performed during cooking, cleaning and servicing work.

The safety information contained in the user manual and installation manual must always be considered to be part of the operating instructions. The safety information contained in the user manual and installation manual must always be observed when performing tasks that go beyond merely operating the software.

Parts of this document that must be read without fail

If you do not follow the information in this document, you risk potentially fatal injury and property damage.

To guarantee safety, all people who work with the combi oven must have read and understood the following parts of this document before starting any work:

- the chapter 'For your safety' on page 20
- the sections that describe the activity to be carried out

Hazard symbol

Hazard symbol	Meaning
⚠	Warns of potential injuries. Heed all the warning notices that appear after this symbol to avoid potential injuries or death.

Form of warning signs

The warning signs are categorized according to the following hazard levels:

Hazard level	Consequences	Likelihood
⚠DANGER	Death / serious injury (irreversible)	Immediate risk
⚠WARNING	Death / serious injury (irreversible)	Potential risk
⚠CAUTION	Minor injury (reversible)	Potential risk
NOTICE	Damage to property	Potential risk

1.5 About this installation manual

Purpose

This installation manual is intended for all people who work with the combi oven, and provides them with the necessary information for proper and safe working when moving, setting up and installing the appliance and when putting the appliance into service.

Who should read the installation manual

Name of target group	Tasks
Start-up engineer (Service engineer)	▪ Overall responsibility for putting the combi oven into service ▪ Instructing the user
Owner of the combi oven or Owner's member of staff who is responsible for the appliance	▪ Made aware of all safety-related functions and devices of the combi oven by the start-up engineer ▪ Instructed by the start-up engineer on how to operate the appliance ▪ Provides assistance as instructed with conveying the appliance within the establishment and setting up the appliance.
Equipment mover	Conveying within the establishment
Service engineer	▪ Setting up the appliance ▪ Installing the fully automatic oven cleaning system ConvoClean / ConvoClean+ (optional) ▪ Putting the appliance into service and removing the appliance from service
Electrical installation engineer	▪ Connecting the appliance to the building's electrical supply ▪ Disconnecting the electrical connection
Plumber	▪ Connecting the appliance to the building's water supply ▪ Disconnecting the water connection ▪ Connecting the appliance to the building's wastewater system ▪ Disconnecting the drain connection
Gas installation engineer	Installing and removing the gas connection

Chapters in the installation manual

Chapter/section	Purpose
General	▪ Shows you how to identify your appliance ▪ Provides guidance on using this installation manual
Design and function	▪ Specifies the intended use of the appliance ▪ Explains the functions of the appliance and shows the position of its components
For your safety	Describes the hazards posed by the appliance and suitable preventive measures **It is important that you read this chapter carefully.**
Moving the appliance	▪ Specifies the basic appliance dimensions ▪ Explains how to convey the appliance to the installation location
Setting up the appliance	▪ Provides information about adjacent systems for exhaust gas extraction and air ventilation ▪ Specifies the requirements for the installation location ▪ Explains how to unpack the appliance and specifies the parts supplied with the appliance ▪ Explains how to set up the appliance

Chapter/section	Purpose
Installation	Provides information on installing the: ▪ Electrical supply ▪ Gas ▪ Water and wastewater ▪ Exhaust gas and vented air ▪ ConvoClean+ / ConvoClean fully automatic oven cleaning system
Putting into service	Explains the procedure for putting the appliance into service
Removal from service and disposal	▪ Explains the procedure for removing the appliance from service ▪ Contains information about disposal
Technical data	Contains the technical data
Connection diagrams	Contains dimensioned drawings and connection points

Checklists and completion of installation	▪ Contains the checklists for
	  ▪ Installation
	  ▪ Safety devices and warnings
	  ▪ Customer guidance and instruction
	▪ Contains information on the warranty and explains the completion procedure using the checklists

Notation for decimal points

A decimal point is always used in order to achieve international standardization.

2 Design and function

Purpose of this chapter

This chapter describes the design and construction of the combi oven and explains its functions.

2.1 Design and function of the combi oven

Components and function (electrical table-top units)

The following illustration shows a size 6.10 combi oven as an example of all electric table-top units:

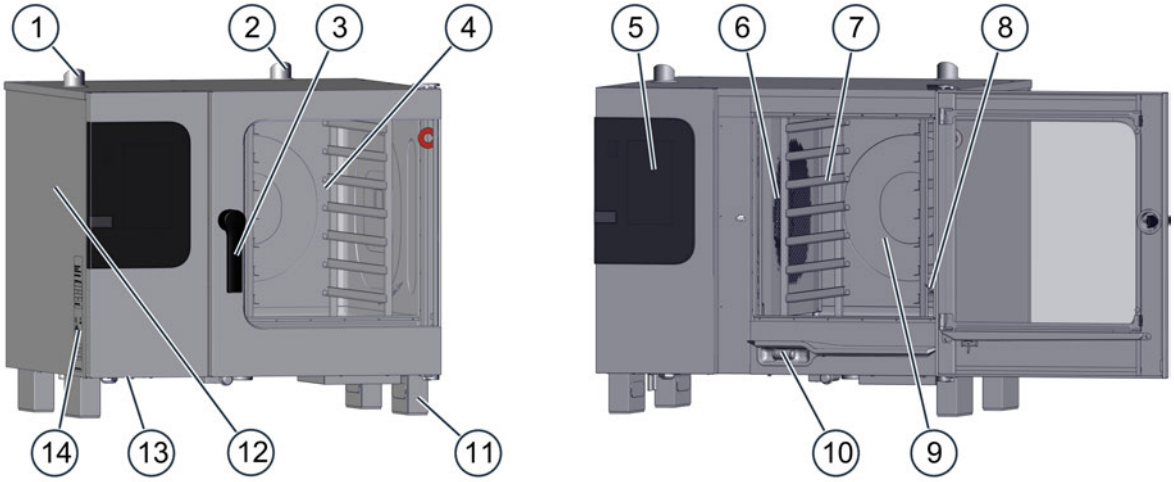

Item	Name	Function
1	Ventilation port	▪ External air intake for removing the moisture removal from the cooking chamber ▪ Smooths out any pressure fluctuations in the cooking chamber
2	Air vent	Allows hot vapour to escape
3	Door handle	▪ Opens and closes the appliance door ▪ Venting position for opening the appliance safely (“safety catch”) ▪ Sure-shut function ▪ Antibacterial material containing silver ions ("HygienicCare")
4	Appliance door	▪ Closes the cooking chamber ▪ Can slide back beside the appliance when opened in order to save space ("disappearing door") (optional)
5	Operating panel	▪ Used for operating the appliance ▪ Antibacterial ("HygienicCare")
6	Suction panel	▪ Distributes the heat evenly inside the cooking chamber ▪ Separates the fan compartment from the cooking chamber
7	Rack	Holds standard-sized food containers
8	Core temperature probe, sous-vide sensor (optional)	▪ Measures the core temperature of the food being cooked ▪ Available in two connection options: permanent internal connection or temporary external connection
9	Cooking chamber	Contains the food during cooking operation
10	Recoil hand shower (this is not fitted on certain appliances)	▪ Intended solely for rinsing out the cooking chamber with water ▪ Retracts automatically into the holder after use ▪ Antibacterial ("HygienicCare")
11	Appliance feet	Can be adjusted in height to allow the appliance to be positioned horizontally

Item	Name	Function
12	Side panel	Covers the appliance wiring compartment
13	Ventilation slots underneath the appliance	▪ Used for appliance ventilation ▪ Must not be covered
14	Type plate	Identifies the appliance

Components and function (electric floor-standing units)

The figure below shows a size 20.20 combi oven as an example of all electric floor-standing units:

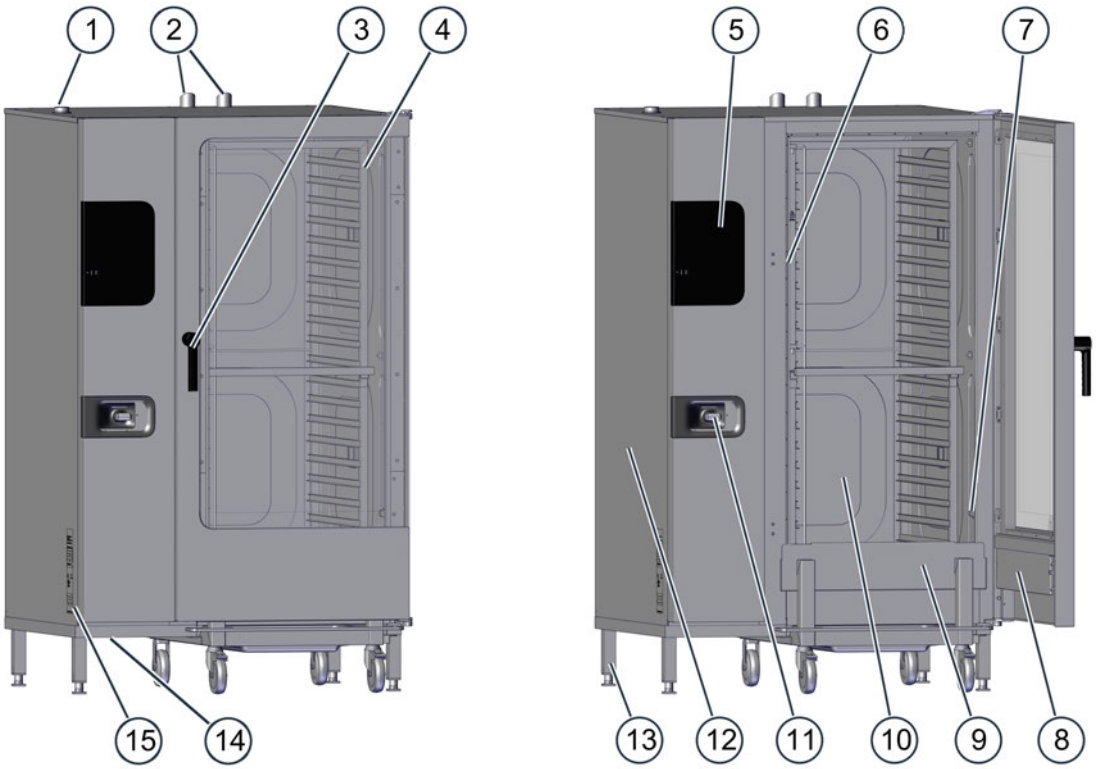

Item	Name	Function
1	Ventilation port	▪ External air intake for removing the moisture removal from the cooking chamber ▪ Smooths out any pressure fluctuations in the cooking chamber
2	Air vent	Allows hot vapour to escape
3	Door handle	▪ Opens and closes the appliance door ▪ On-latch position for opening the appliance safely ▪ Antibacterial material containing silver ions ("HygienicCare")
4	Appliance door	▪ Closes the cooking chamber ▪ Can slide back beside the appliance when opened in order to save space ("disappearing door") (optional)
5	Operating panel	▪ Used for operating the appliance ▪ Antibacterial ("HygienicCare")
6	Suction panel	▪ Distributes the heat evenly inside the cooking chamber ▪ Separates the fan compartment from the cooking chamber
7	Core temperature probe, sous-vide sensor (optional)	▪ Measures the core temperature of the food being cooked ▪ Available in two connection options: permanent internal connection or temporary external connection
8	Built-in preheat bridge in appliance door	Used for safety purposes during preheating and reduces energy wastage

Item	Name	Function
9	Loading trolley	Holds standard-sized food containers
10	Cooking chamber	Contains the food during cooking operation
11	Recoil hand shower (this is not fitted on certain appliances)	▪ Intended solely for rinsing out the cooking chamber with water ▪ Retracts automatically into the holder after use ▪ Antibacterial ("HygienicCare")
12	Side panel	Covers the appliance wiring compartment
13	Appliance feet	Can be adjusted in height to allow the appliance to be positioned horizontally
14	Ventilation slots underneath the appliance	▪ Used for appliance ventilation ▪ Must not be covered
15	Type plate	Identifies the appliance

Components and function (gas table-top units)

The following illustration shows a size 6.10 combi oven as an example of all gas table-top units:

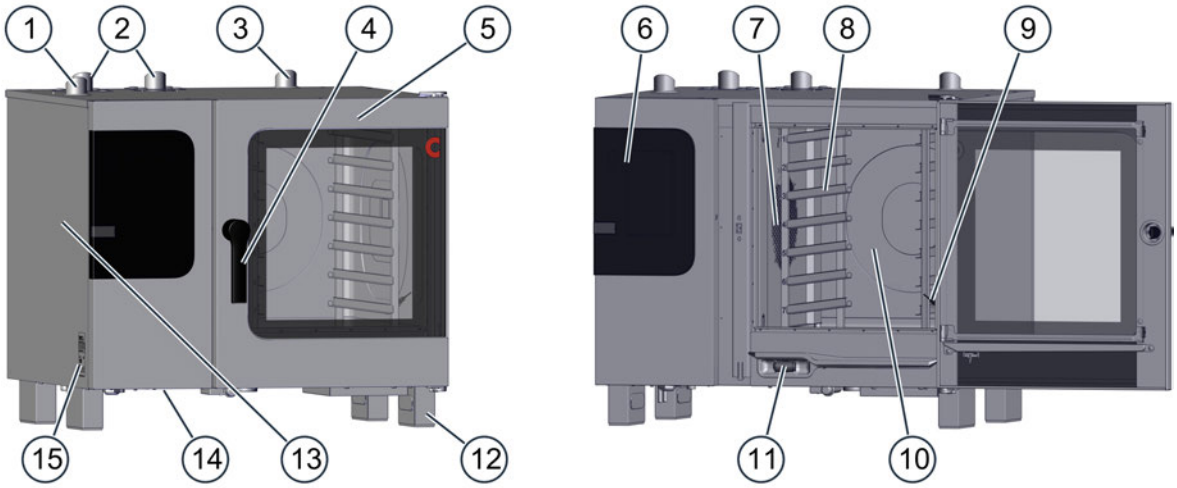

Item	Name	Function
1	Ventilation port	▪ External air intake for removing the moisture removal from the cooking chamber ▪ Smooths out any pressure fluctuations in the cooking chamber
2	Exhaust outlet	Takes away hot exhaust gases
3	Air vent	Allows hot vapour to escape
4	Door handle	▪ Opens and closes the appliance door ▪ Venting position for opening the appliance safely (“safety catch”) ▪ Sure-shut function ▪ Antibacterial material containing silver ions ("HygienicCare")
5	Appliance door	▪ Closes the cooking chamber ▪ Can slide back beside the appliance when opened in order to save space ("disappearing door") (optional)
6	Operating panel	▪ Used for operating the appliance ▪ Antibacterial ("HygienicCare")
7	Suction panel	▪ Distributes the heat evenly inside the cooking chamber ▪ Separates the fan compartment from the cooking chamber
8	Rack	Holds standard-sized food containers
9	Core temperature probe, sous-vide sensor (optional)	▪ Measures the core temperature of the food being cooked ▪ Available in two connection options: permanent internal connection or temporary external connection

Item	Name	Function
10	Cooking chamber	Contains the food during cooking operation
11	Recoil hand shower (this is not fitted on certain appliances)	▪ Intended solely for rinsing out the cooking chamber with water ▪ Retracts automatically into the holder after use ▪ Antibacterial ("HygienicCare")
12	Appliance feet	Can be adjusted in height to allow the appliance to be positioned horizontally
13	Side panel	Covers the appliance wiring compartment
14	Ventilation slots underneath the appliance	▪ Used for appliance ventilation ▪ Must not be covered
15	Type plate	Identifies the appliance

Components and function (gas floor-standing units)

The following illustration shows a size 20.20 combi oven as an example of all gas floor-standing units:

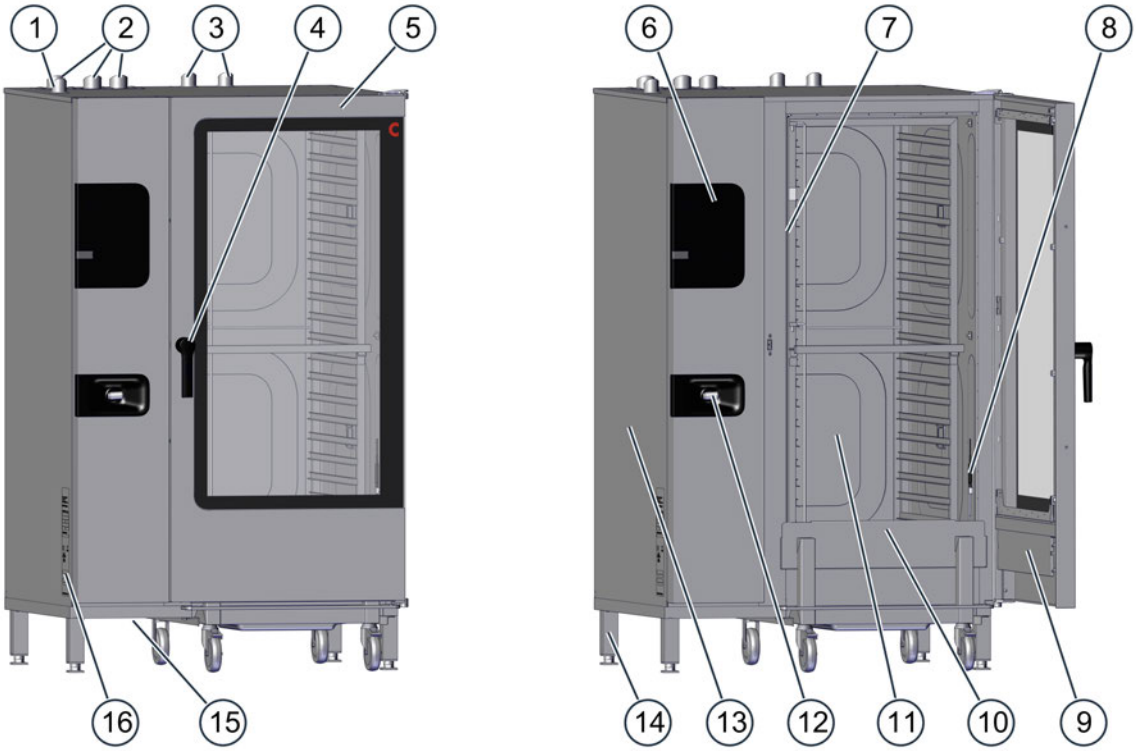

Item	Name	Function
1	Ventilation port	▪ External air intake for removing the moisture removal from the cooking chamber ▪ Smooths out any pressure fluctuations in the cooking chamber
2	Exhaust outlet	Takes away hot exhaust gases
3	Air vent	Allows hot vapour to escape
4	Door handle	▪ Opens and closes the appliance door ▪ On-latch position for opening the appliance safely ▪ Antibacterial material containing silver ions ("HygienicCare")
5	Appliance door	▪ Closes the cooking chamber ▪ Can slide back beside the appliance when opened in order to save space ("disappearing door") (optional)
6	Operating panel	▪ Used for operating the appliance ▪ Antibacterial ("HygienicCare")

Item	Name	Function
7	Suction panel	▪ Distributes the heat evenly inside the cooking chamber ▪ Separates the fan compartment from the cooking chamber
8	Core temperature probe, sous-vide sensor (optional)	▪ Measures the core temperature of the food being cooked ▪ Available in two connection options: permanent internal connection or temporary external connection
9	Built-in preheat bridge in appliance door	Used for safety purposes during preheating and reduces energy wastage
10	Loading trolley	Holds standard-sized food containers
11	Cooking chamber	Contains the food during cooking operation
12	Recoil hand shower (this is not fitted on certain appliances)	▪ Intended solely for rinsing out the cooking chamber with water ▪ Retracts automatically into the holder after use ▪ Antibacterial ("HygienicCare")
13	Side panel	Covers the appliance wiring compartment
14	Appliance feet	Can be adjusted in height to allow the appliance to be positioned horizontally
15	Ventilation slots underneath the appliance	▪ Used for appliance ventilation ▪ Must not be covered
16	Type plate	Identifies the appliance

Components and function of the special security mechanism (prison model only)

The following illustration shows the optional special security mechanism for a size 6.10 gas combi oven as an example of all appliance sizes:

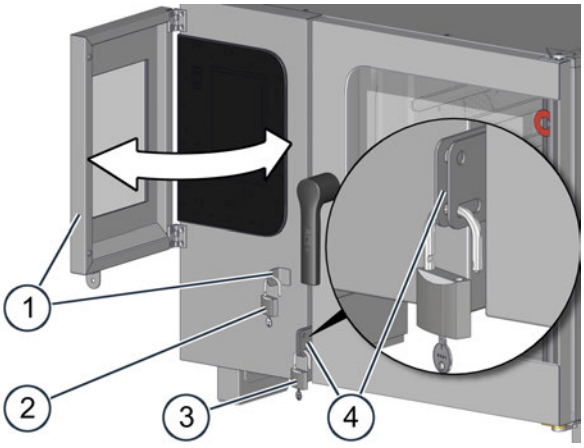

Item	Name	Function
1	Lockable cover to the operating panel	The hinged cover can be closed over the operating panel and locked to the appliance case in order to prevent unauthorized use of the combi oven.
2	Padlock	▪ To lock the operating panel cover to the appliance case ▪ Not supplied
3	Padlock	▪ To lock the appliance door to the appliance case ▪ Not supplied
4	Locking mechanism for the appliance door	Provides a two-stage lock for the appliance door to prevent unauthorized opening and closing of the appliance door Behaviour of the appliance door: ▪ When the top locking position is used, the appliance door remains fully closed. ▪ When the bottom locking position is used, the appliance door can be opened as far as the venting position on table-top units or as far as the on-latch position for floor-standing units.

Material

The interior and exterior structure of the appliance is made of stainless steel.

2.2 Layout and function of the operating panel

Layout and elements of the easyTouch operating panel

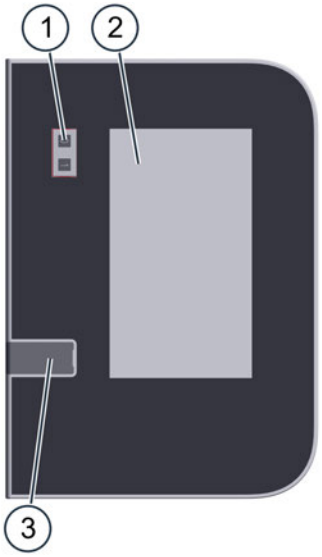

Item	Name	Function
1	Appliance ON/OFF switch	Switches the combi oven on and off
2	Full touchscreen display	Central controls for appliance ▪ Appliance operated by touching icons on the control panel (full touchscreen display) ▪ Status displays
3	USB port	For connecting a USB stick

Layout and elements of the easyDial operating panel

Item	Name	Function
1	Appliance ON/OFF switch	Switches the combi oven on and off
2	Control panel	Central controls for appliance ▪ Buttons for entering the cooking programs ▪ Displays showing the values you have set ▪ Prompts for the user
3	USB port	For connecting a USB stick
4	C-Dial	Combined rotary knob and pushbutton for adjusting and setting the cooking parameters.

3 For your safety

Purpose of this chapter

This chapter provides you with all the information you need in order to use the combi oven safely without putting yourself or others at risk.

This is a particularly important chapter that you should read through carefully.

3.1 ⚠ Basic safety code

Object of this safety code

This safety code aims to ensure that all persons who use the combi oven have a thorough knowledge of the hazards and safety precautions, and that they follow the warning notices given in the user manual and on the combi oven. If you do not follow this safety code, you risk potentially fatal injury and property damage.

Referring to the user manuals included in the customer documentation

Follow the instructions below:

- Read in full the chapter 'For Your Safety' and the chapters that relate to your work.
- Always keep to hand the manuals included in the customer documentation for reference.
- Pass on the user manuals included in the customer documentation with the combi oven if it changes ownership.

Ground rules for installation

Installation must comply with all national and regional laws and regulations and comply with the local regulations of the relevant utility companies and local authorities and with other relevant requirements.

In Australia and New Zealand, these regulations also include (amongst other regulations):

- AS 5601/AG 601

Working with the combi oven

Follow the instructions below:

- Only those persons who satisfy the requirements stipulated in this user manual are permitted to use the combi oven.
- Only use the combi oven for the specified use. Never, under any circumstances, use the combi oven for other purposes that may suggest themselves.
- Take all the safety precautions specified in this user manual and on the combi oven. In particular, use the prescribed personal protective equipment.
- Only stand in the working positions specified.
- Do not make any changes to the combi oven, e. g. removing parts or fitting unapproved parts. In particular, you must not disable any safety devices.

More on this ...

Related topics

- ▷ Intended use of your combi oven 22
- ▷ Warning signs on the combi oven for table-top units 23
- ▷ Warning signs on the combi oven for floor-standing units 25
- ▷ Hazards and safety precautions when moving the appliance 27
- ▷ Hazards and safety precautions when setting up the appliance 28
- ▷ Hazards and safety precautions during installation 29
- ▷ Hazards and safety precautions when putting the appliance into service 31
- ▷ Hazards and safety precautions when removing the appliance from service 34
- ▷ Safety devices 37
- ▷ Requirements to be met by personnel, working positions 41
- ▷ Personal protective equipment 43

3.2 ⚠ Intended use of your combi oven

Intended use

- The combi oven is designed and built solely for cooking different foodstuffs in standard-sized food containers (e.g. Gastronorm containers, standard baking trays). Steam, convection and combi-steam (non-pressurized superheated steam) are used for this purpose.
- The food containers can be made of stainless steel, ceramic, plastic, aluminium, enamelled steel or glass. Glass food containers must not exhibit any form of damage.
- The combi oven is intended solely for professional, commercial use.

Restrictions on use

Some materials are not allowed to be heated in the combi oven:

- NO dry powder or granulated material
- NO highly flammable substances or objects with a flash point below 270 °C, such as highly flammable oils, fats or plastics
- NO food in sealed tins or jars

Requirements to be met by personnel

- The combi oven must only be operated and installed by personnel who satisfy specific requirements. Please refer to 'Requirements to be met by personnel, working positions' on page 41 for the training and qualifications requirements.
- Personnel must be aware of the risks and regulations associated with handling heavy loads.

Requirements relating to the operating condition of the combi oven

- The combi oven must only be operated when all safety devices and protective equipment are fitted, in working order and fixed properly in place.
- The manufacturer regulations for operating and servicing the combi oven must be observed.
- The combi oven must not be loaded over the maximum permissible loading weight for the given model or shelf allowance; see 'Technical Data' on page 120.

Requirements relating to the operating environment of the combi oven

Specified operating environment for the combi oven

- The ambient temperature lies between +4 °C and +35 °C
- NOT a toxic or potentially explosive atmosphere
- Dry kitchen floor to reduce the risk of accidents

Specified properties of the installation location

- NO fire alarm, NO sprinkler system directly above the appliance
- NO flammable materials, gases or liquids above, on, beneath or in the vicinity of the appliance

Mandatory restrictions on use

- Shelter from rain and wind must be provided if operated outdoors
- Appliance must NOT be shifted or moved during use

Cleaning requirements

- Use only cleaning agents that have been approved by the manufacturer.
- High-pressure cleaners must NOT be used for cleaning.
- Water sprays must NOT be used for cleaning the exterior. The water spray from the recoil hand shower must only be used for cleaning the cooking chamber.
- The combi oven must NOT be treated with acids or exposed to acid fumes, except for the purpose of descaling the cooking chamber and the boiler by an authorized service company in accordance with the manufacturer's instructions.

3.3 ⚠ Warning signs on the combi oven for table-top units

Fixed platform

A fixed platform for the combi oven is a permanently fixed worktable or stand. These platforms are not intended to be mobile and so are not equipped with features that would help to move them.

Mobile platform

A mobile platform for the combi oven is, for example, a wheeled worktable or a stand on castors or stacking kit on castors.

Positioning of warning signs

The following illustration shows a size 6.10 electric combi oven on a mobile platform as an example of all table-top units:

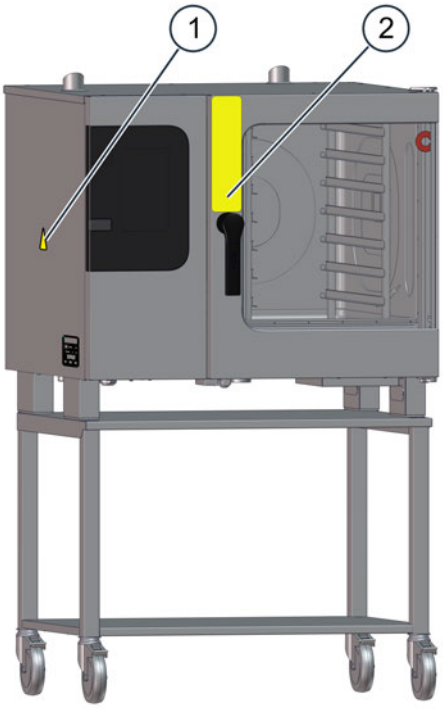

Transport trolley (optional; does not apply to ConvoSmoke)

Obligatory warning signs

The following warning signs must be attached to the combi oven and optional accessories in the area indicated so as to be easily visible at all times.

Area	Warning sign	Description
1		High voltage / electric shock hazard warning There is a risk of electric shock from live parts if the safety cover is opened.
2		Hot steam and vapour hazard warning There is a risk of scalding from hot steam and vapour escaping when the appliance door is opened.

Area	Warning sign	Description
2 and 3 3 does not apply to Convo-Smoke		Warning of hazard from hot food, hot food containers and hot liquids There is a risk of burns from hot food and hot food containers if containers tip out of the shelf levels or food spills from containers that are not held level. This risk is especially high for shelf levels that lie above the sightline of the user. Spillage of hot liquid foods can result in scalds if the upper shelf levels are loaded with liquids or foods that produce liquid during cooking. Do not use the higher shelf levels that lie above your sightline for liquid foodstuffs or food that will liquefy during cooking.
2 only for a mobile platform		Tip-over hazard warning for the combi oven There is a risk of the combi oven toppling over if moved. Always take great care when moving the combi oven.
3 does not apply to Convo-Smoke		Tip-over hazard warning for the transport trolley There is a risk of the transport trolley toppling over if moved. Always take great care when moving the transport trolley. When moving the transport trolley, watch out for objects in the way or unevenness in the floor.
2 only for a mobile platform		Damage or detachment warning for appliance connections There is a risk of the appliance connections being damaged or detached if the combi oven is moved. Always ensure there is enough length in the supply cables and pipes when moving the combi oven. After moving, always secure the combi oven against rolling away.

3.4 ⚠ Warning signs on the combi oven for floor-standing units

Positioning of warning signs

The following illustration shows a size 20.20 electric combi oven as an example of all floor-standing units:

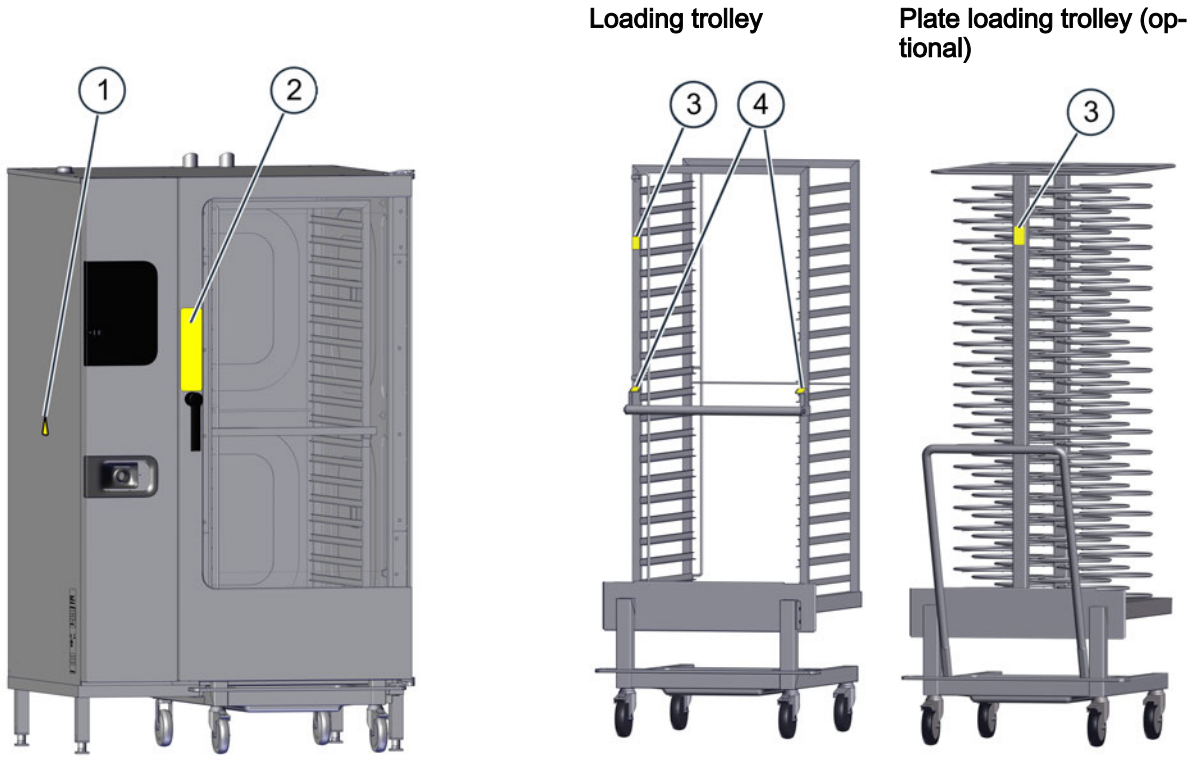

Obligatory warning signs

The following warning signs must be attached to the combi oven and accessories in the area indicated so as to be easily visible at all times.

Area	Warning sign	Description
1		High voltage / electric shock hazard warning There is a risk of electric shock from live parts if the safety cover is opened.
2		Hot steam and vapour hazard warning There is a risk of scalding from hot steam and vapour escaping when the appliance door is opened.
2 and 3		Warning of hazard from hot food, hot food containers and hot liquids There is a risk of burns from hot food and hot food containers if containers tip out of the shelf levels or food spills from containers that are not held level. This risk is especially high for shelf levels that lie above the sightline of the user. Spillage of hot liquid foods can result in scalds if the upper shelf levels are loaded with liquids or foods that produce liquid during cooking. Do not use the higher shelf levels that lie above your sightline for liquid foodstuffs or food that will liquefy during cooking.

Area	Warning sign	Description
3		Tip-over hazard warning for loading trolley or plate loading trolley There is a risk of the loading trolley or plate loading trolley toppling over if moved. Always take great care when moving the loading trolley or plate loading trolley. When moving the loading trolley or plate loading trolley, watch out for objects in the way or unevenness in the floor.
4 Only applies to prison model		Hot surface hazard warning There is a risk of burns from a hot handle on the loading trolley.

3.5 ⚠ Hazards and safety precautions when moving the appliance

Safety hazard: moving heavy weights

Danger	Where or in what situations does the hazard arise?	Preventive action
Risk of injury from overstressing your body	When moving the appliance onto and off the moving equipment	▪ Use a forklift truck or pallet truck ▪ Do not exceed safety limits for lifting and carrying ▪ Wear personal protective equipment

Safety hazard: mechanical parts of the appliance

Danger	Where or in what situations does the hazard arise?	Preventive action
Risk of body parts being crushed if the appliance is dropped	When moving the appliance	▪ Use suitable handling gear ▪ Move the appliance slowly and carefully, and secure it against tipping over ▪ Make sure center of gravity is balanced ▪ Avoid jolts
Risk of body parts being crushed if the appliance tips over or falls off	When placing the appliance down on the supporting surface	Always observe the requirements for the supporting surface while setting up the appliance; see 'Requirements for the installation location' on page 48

3.6 ⚠ Hazards and safety precautions when setting up the appliance

Safety hazard: moving heavy weights

Danger	Where or in what situations does the hazard arise?	Preventive action
Risk of injury from overstressing your body	When moving the appliance	▪ Use a forklift truck or pallet truck to place the appliance in the installation position or to move it to a new position ▪ Always use the correct number of persons and observe the limits specified for lifting and carrying when adjusting the appliance position ▪ Observe the local occupational safety regulations ▪ Wear personal protective equipment

Safety hazard: mechanical parts of the appliance

Danger	Where or in what situations does the hazard arise?	Preventive action
Risk of body parts being crushed if the appliance tips over	When the appliance is being moved off the pallet	▪ Before sliding the appliance off the pallet, make sure that the slides are screwed firmly to the pallet ▪ Take care not to let an appliance foot slip off the side of the slide ▪ Be careful when transferring the appliance from the slide onto the non-slip floor
Risk of body parts being crushed if the appliance is dropped	When lifting the appliance	▪ Make sure center of gravity is balanced ▪ Avoid jolts
Risk of body parts being crushed if the appliance tips over or falls off	When installing the appliance on the floor	Always observe the requirements for the supporting surface while setting up the appliance; see 'Requirements for the installation location' on page 48
Risk of cuts from sharp edges	When handling sheet-metal parts	▪ Exercise caution when performing these tasks ▪ Wear personal protective equipment

3.7 ⚠ Hazards and safety precautions during installation

Safety hazard: electricity

Danger	Where or in what situations does the hazard arise?	Preventive action
Risk of electric shock from live parts	▪ Under covers ▪ Under the operating panel ▪ On the mains power lead	▪ Work on the electrical system must only be performed by qualified electricians from an authorized service company ▪ Professional working
		Before removing the covers: ▪ Switch off all connections to the power supply ▪ Take protective measures at every power switch to ensure that the power cannot be switched on again ▪ If the appliance has previously been connected to the electricity supply, wait 15 minutes to allow the DC bus capacitors to discharge ▪ Make sure that the appliance is de-energized
		Ensure that all electrical connections are in perfect condition and fixed securely before putting the appliance into service
	▪ On the appliance and on adjacent metal parts ▪ On the appliance and on adjacent metallic accessories	Before putting the appliance into service, make sure that the appliance, including all metallic accessories, is connected to an equipotential bonding system
Risk of electric shock from incorrect water connection	In the entire work area, as soon as the water pipe bursts or starts leaking	▪ Use a fixed connection ▪ Make sure that the water pressure of the water supply is compatible with the pressure specified on the appliance ▪ Use suitable pipes and hoses in accordance with applicable regulations (EN 61770 in countries where European standards apply)

Safety hazard: gas

Danger	Where or in what situations does the hazard arise?	Preventive action
Explosion hazard from gas	▪ If gas pipes are leaking ▪ If the customer's gas tap is opened before the gas connection has been fully installed	The gas supply must be connected solely by certified gas installation engineers from an authorized service company
		Install gas shut-off device close to appliance
		For table-top units on a wheeled platform and with a flexible connection pipe: ▪ In order to secure the appliance in place, make sure that the retaining device which restricts the range of movement of the platform plus appliance is connected
		▪ After connecting to the gas supply and after any subsequent operation on gas components, always leak-test every connection and supply point for the gas components to ensure they are gastight. ▪ Ensure that all the specified points inside and outside the appliance are gastight before putting the combi oven into service.

Safety hazard: mechanical parts of the appliance

Danger	Where or in what situations does the hazard arise?	Preventive action
Risk of cuts from sharp edges	When handling sheet-metal parts	▪ Exercise caution when performing these tasks ▪ Wear personal protective equipment

Safety hazard: cleaning agent

Danger	Where or in what situations does the hazard arise?	Preventive action
Risk of chemical burns or irritation to skin, eyes and respiratory system from contact with cleaning agents and their fumes	When fitting the cleaning system	▪ Wear personal protective equipment ▪ Observe the labels on the cleaning agents and the relevant safety datasheets
	When corrosive cleaning agents are used	Only use those cleaning agents that are specified under 'Cleaning agents' in the 'Cleaning procedures' chapter of the user manual

3.8 ⚠ Hazards and safety precautions when putting the appliance into service

Safety hazard: electricity

Danger	Where or in what situations does the hazard arise?	Preventive action
Risk of electric shock from live parts	▪ Under covers ▪ Under the operating panel ▪ On the mains power lead	▪ Work on the electrical system must only be performed by qualified electricians from an authorized service company ▪ Professional working
		Before removing the covers: ▪ Switch off all connections to the power supply ▪ Take protective measures at every power switch to ensure that the power cannot be switched on again ▪ If the appliance has previously been connected to the electricity supply, wait 15 minutes to allow the DC bus capacitors to discharge ▪ Make sure that the appliance is de-energized
		Ensure that all electrical connections are in perfect condition and fixed securely before putting the appliance into service
	▪ On the appliance and on adjacent metal parts ▪ On the appliance and on adjacent metallic accessories	Before putting the appliance into service, make sure that the appliance, including all metallic accessories, is connected to an equipotential bonding system

Safety hazard: gas

Danger	Where or in what situations does the hazard arise?	Preventive action
Explosion hazard from gas	If the appliance is moved	Never move appliance during use
		For table-top units on a wheeled platform and with a flexible connection pipe: ▪ Only move appliances forward for the purpose of cleaning the case of the combi ovens or the floor under the appliances. Do not move appliances forward by more than the distance permitted by the retaining device on the wheeled platform (0.5 m max.). ▪ Before operating the appliance, always engage the parking brake on the wheels ▪ Check that wheel brakes are on before operation each day
Risk of suffocation from lack of breathable air	Where appliance is installed	▪ Check the exhaust gas readings and if they need adjusting get a qualified gas installation engineer from an authorized service company to adjust the burner ▪ Ensure that a ventilation system is in place, is working properly and is running, and that the ventilation requirements stipulated by the gas installation engineer are met ▪ Do not obstruct lower area of equipment ▪ Only operate appliance in a draught-free environment

Safety hazard: mechanical parts of the appliance

Danger	Where or in what situations does the hazard arise?	Preventive action
Risk of injuries from rotating fan	If the cooking chamber is being cooled using 'Cool down' with the appliance door open and the fan wheel is exposed because the suction panel is not fitted	Make sure that the suction panel is fitted and secured in place

Safety hazard: moving appliances supported on a wheeled platform

Danger	Where or in what situations does the hazard arise?	Preventive action
All specified hazards	While appliances are being moved on a wheeled platform	▪ Before moving appliances with a fixed wastewater connection, disconnect the drain pipe ▪ Disconnect the appliance from the electrical supply before moving it ▪ Before moving (for instance to clean the case of the combi ovens or to clean the floor), check whether the retaining device which restricts the radius of movement of the platform plus appliance is connected. ▪ When moving the appliance, take care not to wheel over the electrical supply cables or the gas and water pipes
Risk of crushing to multiple body parts	While appliances are being moved on a wheeled platform	▪ Watch out for the connecting cables and pipes. ▪ Use at least two people to move it
Risk of hands and feet being pinched	While appliances are being moved on a wheeled platform	Keep the appliance doors closed
Risk of scalding from hot wastewater	While appliances are being moved on a wheeled platform	▪ Let the appliance cool down ▪ Wipe up immediately any water spillages ▪ Wear protective clothing
Risk of scalding from hot liquid food	While appliances are being moved on a wheeled platform	Always remove any food from the appliances before moving them
Risk of electric shock from live parts	While appliances are being moved on a wheeled platform	Watch out for connected electrical cables and water pipes
Explosion hazard from gas	While appliances are being moved on a wheeled platform	Watch out for the gas supply line
Risk of skin and eye irritation from contact with cleaning agents	While appliances are being moved on a wheeled platform	▪ Make sure that the connecting lines and pipes are long enough ▪ Keep cleaning-agent canisters closed when moving the base
Risk of tripping from exposed cables and pipes	While cleaning behind appliances when pulled forward	Exercise caution when performing this action
Risk of falling on wet floor caused by wastewater	▪ While cleaning behind appliances when pulled forward ▪ In front of the appliances	▪ Wipe up immediately any water spillages ▪ Make sure that the connecting lines and pipes are long enough
Risk of falling on wet floor caused by cleaning agents	▪ While cleaning behind appliances when pulled forward ▪ In front of the appliances	Keep the cleaning-agent canisters closed when moving appliances

Additional safety hazards when putting the appliance into service

When putting the appliance into service, read and follow the safety information given in this chapter and also the following sections in the chapter 'For your safety' in the user manual:

- 'Hazards and safety precautions during operation'
- 'Hazards and safety precautions during cleaning'

3.9 ⚠ Hazards and safety precautions when removing the appliance from service

Safety hazard: electricity

Danger	Where or in what situations does the hazard arise?	Preventive action
Risk of electric shock from live parts	▪ Under covers ▪ Under the operating panel	▪ Work on the electrical system must only be performed by qualified electricians from an authorized customer service company ▪ Professional working
		Before removing the covers: ▪ Switch off all connections to the power supply ▪ Take protective measures at every power switch to ensure that the power cannot be switched on again ▪ Wait 15 minutes to allow the DC bus capacitors to discharge ▪ Make sure that the appliance is de-energized

Safety hazard: gas

Danger	Where or in what situations does the hazard arise?	Preventive action
Explosion hazard from gas	If the gas supply system has not been disconnected before starting work on the gas installation	Always disconnect the gas supply system before starting work on the gas installation
		Any work on the gas installation must be entrusted solely to certified gas installation engineers from an authorized service company

Safety hazard: moving heavy weights

Danger	Where or in what situations does the hazard arise?	Preventive action
Risk of injury from overstressing your body	When moving the appliance onto and off the moving equipment	▪ Use a forklift truck or pallet truck ▪ Do not exceed safety limits for lifting and carrying ▪ Wear personal protective equipment

Safety hazard: moving appliances supported on a wheeled platform

Danger	Where or in what situations does the hazard arise?	Preventive action
All specified hazards	While appliances are being moved on a wheeled platform	▪ Disconnect the appliance from the electrical supply before moving it ▪ Before moving appliances with a fixed wastewater connection, disconnect the drain pipe ▪ Before moving (e.g. to access the back of the appliance), check that the retaining device is connected. The retaining device restricts the range of movement of the platform supporting the appliance. The lengths of the electrical supply cables and gas and water pipes are chosen to accommodate the range of movement of the retaining device. ▪ When moving the appliance, take care not to wheel over the electrical supply cables or the gas and water pipes
Risk of crushing to multiple body parts	While appliances are being moved on a wheeled platform	▪ Watch out for the connecting cables and pipes. ▪ Use at least two people to move it
Risk of hands and feet being pinched	While appliances are being moved on a wheeled platform	Keep the appliance doors closed
Risk of scalding from hot wastewater	While appliances are being moved on a wheeled platform	▪ Let the appliance cool down ▪ Wipe up immediately any water spillages ▪ Wear personal protective equipment
Risk of scalding from hot liquid food	While appliances are being moved on a wheeled platform	Always remove any food from the appliances before moving them
Risk of electric shock from live parts	While appliances are being moved on a wheeled platform	Watch out for connected electrical cables and water pipes
Explosion hazard from gas	While appliances are being moved on a wheeled platform	Watch out for the gas supply line
Risk of skin and eye irritation from contact with cleaning agents	While appliances are being moved on a wheeled platform	▪ Make sure that the connecting lines and pipes are long enough ▪ Keep cleaning-agent canisters closed when moving the base
Risk of tripping from exposed cables and pipes	While cleaning behind appliances when pulled forward	Exercise caution when performing this action
Risk of falling on wet floor caused by wastewater	▪ While cleaning behind appliances when pulled forward ▪ In front of the appliances	▪ Wipe up immediately any water spillages ▪ Make sure that the connecting lines and pipes are long enough
Risk of falling on wet floor caused by cleaning agents	▪ While cleaning behind appliances when pulled forward ▪ In front of the appliances	Keep the cleaning-agent canisters closed when moving appliances

Safety hazard: mechanical parts of the appliance

Danger	Where or in what situations does the hazard arise?	Preventive action
Risk of body parts being crushed if the appliance tips over or falls off	When the appliance is being moved e.g. to gain better access to the connections	Observe the requirements for the supporting surface at all times when removing the appliance from service; see 'Requirements for the installation site' on page 48
Risk of slipping on damp kitchen floor	In front of the appliance	Ensure that the floor around the appliance is dry at all times

Safety hazard: cleaning agent

Danger	Where or in what situations does the hazard arise?	Preventive action
Risk of chemical burns or irritation to skin, eyes and respiratory system from contact with cleaning agents and their fumes	▪ When removing the cleaning system ▪ When disposing of the appliance	▪ Wear personal protective equipment ▪ Observe the labels on the cleaning agents and the relevant safety datasheets

3.10 ⚠ Safety devices

Meaning

The combi oven has a number of safety devices to protect the user from hazards. It is absolutely essential that all safety devices are fitted and in working order when operating the combi oven

Position and function (table-top units)

The following illustration shows a size 6.10 electric combi oven as an example of all table-top units:

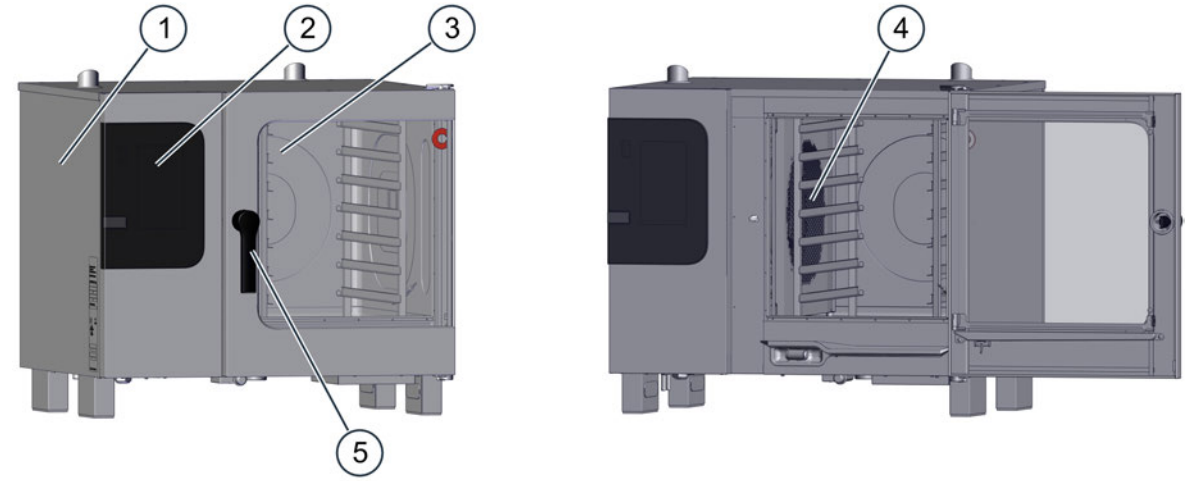

Item	Safety device	Function	Check
1	Cover can only be removed using tool	▪ Prevents live parts from being touched accidentally ▪ Prevents access to the moving fan from the wiring compartment	Check that the cover is in place
2	Operating panel can only be removed using a tool	Prevents live parts from being touched accidentally	Ensure that the operating panel is in place
3	Appliance door with magnetic door switch	Appliance door: Protects the user and outside environment from hot steam	Check the door pane regularly for scratches, cracks, indentations etc. and replace it if any are found

		Magnetic door switch (electrical door sensor):
		▪ When the appliance door is opened, the switch stops:
		  ▪ rotation of the fan wheel (comes to a stop after a few seconds)
		  ▪ operation of the heating element
		  ▪ Distribution of the cleaning agents by the fully automatic oven cleaning system
		▪ Prompt to close the appliance door
			Check magnetic door switch at low temperature
			Action:
			▪ Open the appliance door fully
			▪ Press Start
			Result:
			Motor must not start up.

4	Suction panel in cooking chamber; can only be removed using a tool	Prevents access to the moving fan and ensures good heat distribution	See 'Releasing and securing the suction panel' in the User manual

Item	Safety device	Function	Check
5	Venting position of appliance door	Prevents scalding of user's face and hands from escaping steam	When appliance is at low temperature, check door positions as described in 'Opening and closing the appliance door safely' in the user manual
6 (no picture)	Safety thermostat ▪ Boiler ▪ Cooking chamber	Switches off the appliance if temperature too high	An error code is output in the event of a fault (Please contact an authorized service company to reset the safety thermostat)
7 (no picture)	Restart after power failure in case cleaning agent was left in the appliance	Restarts fully automatic oven cleaning in a defined state after power failure	None
8 (installed by customer)	Disconnection device	▪ Installed by the customer close to the appliance; easily visible and accessible, 3-pole action, minimum contact separation 3 mm. ▪ Used to disconnect the appliance from the power supply during cleaning, repair and servicing work and in a hazardous situation	Action: ▪ Trip the disconnection device ▪ Check at the -X10 terminal strip on the appliance that none of the three phases carry a live voltage
9 (installed by customer)	Gas shut-off device	▪ Installed by customer close to appliance in easily accessible position and clearly labeled ▪ Used to disconnect the appliance from the gas supply during cleaning, repair and servicing work and in a hazardous situation	Action: ▪ Close gas shut-off device ▪ Check that the appliance is isolated from the gas supply
10 (no picture)	Only when installing on a wheeled stand: Retaining device	Restricts the range of movement of the assembly (platform plus appliance) at the customer's site.	Check that the retaining device is connected

Position and function (floor-standing units)

The following illustration shows a size 20.20 electric combi oven as an example of all floor-standing units:

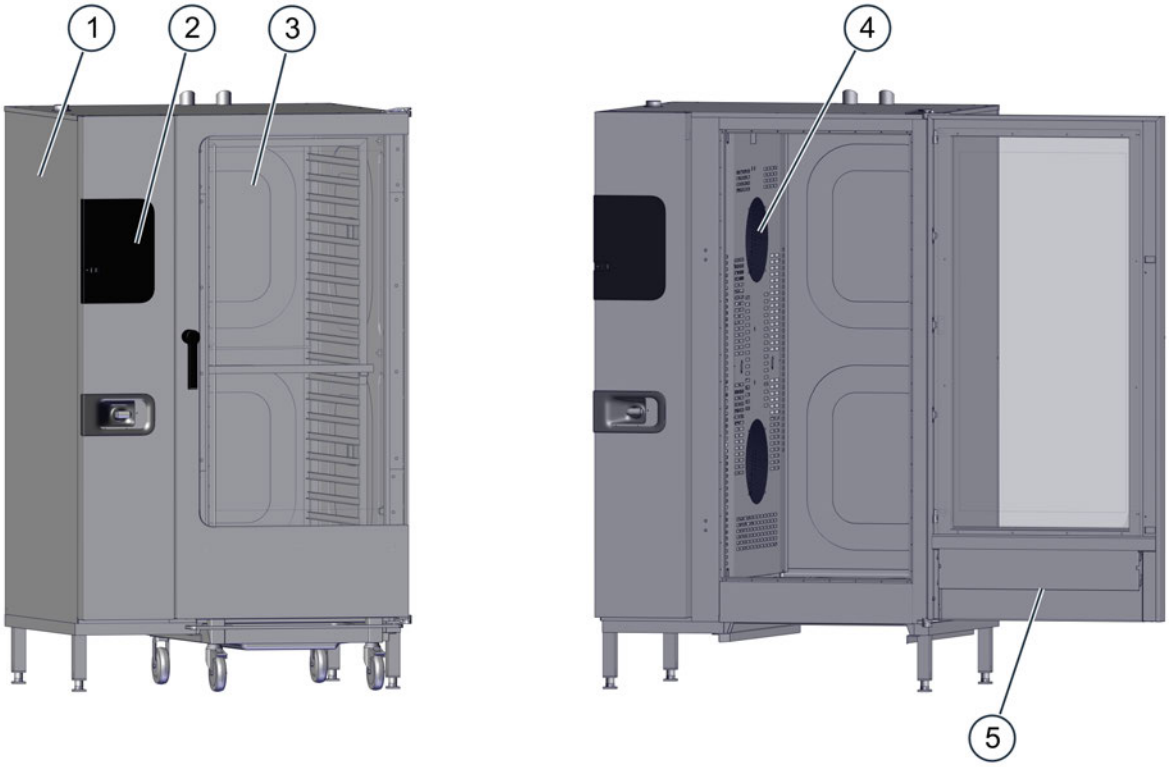

Item	Safety device	Function	Check
1	Cover can only be removed using tool	▪ Prevents live parts from being touched accidentally ▪ Prevents access to the moving fan from the wiring compartment	Check that the cover is in place
2	Operating panel can only be removed using a tool	Prevents live parts from being touched accidentally	Ensure that the operating panel is in place
3	Appliance door with magnetic door switch	Appliance door: Protects the user and outside environment from hot steam	Check the door pane regularly for scratches, cracks, indentations etc. and replace it if any are found

		Magnetic door switch (electrical door sensor):
		▪ When the appliance door is opened, the switch stops:
		  ▪ rotation of the fan wheel (comes to a stop after a few seconds)
		  ▪ operation of the heating element
		  ▪ Distribution of the cleaning agents by the fully automatic oven cleaning system
		▪ Prompt to close the appliance door
			Check magnetic door switch at low temperature
			Action:
			▪ Open the appliance door fully
			▪ Press Start
			Result:
			Motor must not start up.

Item	Safety device	Function	Check
4	Suction panel in cooking chamber; can only be removed using a tool	Prevents access to the moving fan and ensures good heat distribution	See 'Releasing and securing the suction panel' in the User manual
5	Built-in preheat bridge in appliance door	Prevents scalding from escaping steam when the loading trolley is not in the appliance during preheating	None
6 (no picture)	Safety thermostat ▪ Boiler ▪ Cooking chamber	Switches off the appliance if temperature too high	An error code is output in the event of a fault (Please contact an authorized service company to reset the safety thermostat)
7 (no picture)	Restart after power failure in case cleaning agent was left in the appliance	Restarts fully automatic oven cleaning in a defined state after power failure	None
8 (installed by customer)	Disconnection device	▪ Installed by the customer close to the appliance; easily visible and accessible, 3-pole action, minimum contact separation 3 mm. ▪ Used to disconnect the appliance from the power supply during cleaning, repair and servicing work and in a hazardous situation	Action: ▪ Trip the disconnection device ▪ Check at the -X10 terminal strip on the appliance that none of the three phases carry a live voltage
9 (installed by customer)	Gas shut-off device	▪ Installed by customer close to appliance in easily accessible position and clearly labeled ▪ Used to disconnect the appliance from the gas supply during cleaning, repair and servicing work and in a hazardous situation	Action: ▪ Close gas shut-off device ▪ Check that the appliance is isolated from the gas supply

3.11 ⚠ Requirements to be met by personnel, working positions

Requirements to be met by personnel

The table shows the skills required to perform the specified roles. One person may perform more than one role depending on need and organization of work, provided this person has the skills required for the role concerned.

Role	Skills required	Tasks
Owner of the combi oven or owner's member of staff who is responsible for the appliance and for the operating personnel	Knows the regulations associated with handling heavy loads	▪ As the representative for the entire team of operating personnel, is made aware of all safety-related functions and devices of the combi oven by the start-up engineer ▪ As the representative for the entire team of operating personnel, is instructed by the start-up engineer on how to operate the appliance ▪ Provides assistance as instructed with conveying the appliance within the establishment and setting up the appliance.
Equipment mover	▪ Trained in the use of a pallet truck and forklift truck ▪ Knows the regulations associated with handling heavy loads	Conveying within the establishment
Service engineer	▪ Is an employee of an authorized service company ▪ Has relevant technical training ▪ Is trained in the particular appliance ▪ Knows the regulations associated with handling heavy loads ▪ Can assess whether the electrical, gas and water supplies and the wastewater system have been connected correctly. ▪ For servicing work on the gas fittings: is a qualified service engineer from a service company authorized by the gas utility company	▪ Setting up the appliance ▪ Installing the fully automatic oven cleaning system ▪ Preparing the appliance for first-time use ▪ Taking the appliance out of operation
Gas installation engineer	▪ Is a gas installation engineer authorized by the gas utility company ▪ Has relevant professional training ▪ Is an employee of an authorized service company	▪ Connecting the appliance to the building's gas supply ▪ Disconnecting the gas supply
Electrical installation engineer	▪ Is an employee of an authorized service company ▪ Has relevant professional training ▪ Is a qualified electrician	▪ Connecting the appliance to the building's electrical supply ▪ Disconnecting the electrical connection

Role	Skills required	Tasks
Plumber	▪ Is an employee of an authorized service company ▪ Has relevant professional training	▪ Connecting the appliance to the building's water supply ▪ Disconnecting the water connection ▪ Connecting the appliance to the building's wastewater system ▪ Disconnecting the wastewater system
Start-up engineer (Service engineer)	▪ Is an employee of an authorized service company who has overall responsibility for preparing the combi oven for first-time use ▪ Has relevant technical training ▪ Is trained in the particular appliance ▪ Knows the regulations associated with handling heavy loads ▪ Can assess whether the electrical, gas and water supplies and the wastewater system have been connected correctly.	▪ Instructing the owner and/or member of staff with relevant responsibility ▪ Checking the work procedures and status values against the checklists

Working positions when installing the appliance and putting the appliance into service

The working position for personnel installing the appliance and putting the appliance into service is the entire appliance area.

3.12 ⚠ Personal protective equipment

Moving and setting up the appliance

Activity	Materials used	Personal protective equipment
▪ Conveying within the establishment ▪ Setting up the appliance on a worktable, stand or in a stacking kit ▪ Setting up the appliance in the installation location	▪ Lifting straps ▪ Suitable lifting gear ▪ Forklift truck or pallet truck	▪ Protective gloves ▪ Safety boots ▪ Hard hat (e.g. when heavy loads are being lifted, working overhead,...)

Installation, putting into service and removal from service

Activity	Materials used	Personal protective equipment
Installing and removing (from service) the ▪ Electrical connection ▪ Water connection ▪ Drain connection ▪ Gas connection ▪ Automatic grease removal system	Tools and equipment depend on the task	Work wear and personal protective equipment depending on the job that needs doing as specified in national regulations
Fitting and removing the fully automatic oven cleaning system	Tools and equipment depend on the task	Items of protection equipment, depending on cleaning agent being used: ▪ Breathing mask ▪ Safety goggles ▪ Protective gloves ▪ Protective clothing/apron The EC safety datasheet for the relevant cleaning agent contains a more precise specification of these items. An up-to-date copy can be obtained from the manufacturer. Refer to the label on the cleaning agent concerned.
▪ Putting the appliance into service ▪ Instructing the user	Tools and equipment depend on the task	Work wear as specified in country-specific standards and directives (BGR 111 in Germany) for kitchen work, in particular: ▪ Protective clothing ▪ Heat protective gloves (compliant with EN 407 in European Union) ▪ Safety boots
Dismantling the appliance (removal from service)	▪ Lifting straps ▪ Suitable lifting gear ▪ Forklift truck or pallet truck	▪ Protective gloves ▪ Safety boots ▪ Hard hat (e.g. when heavy loads are being lifted, working overhead,...)

4 Moving the appliance

Purpose of this chapter

This chapter provides information on how to move the appliance.

This chapter is intended for the owner's member of staff responsible for the appliance and for a qualified member of staff from an authorized service company.

4.1 ⚠ Working safely with the appliance

For your safety

Before starting work, familiarize yourself with the hazards described in 'Hazards and safety precautions when moving the appliance' on page 27.

Eligibility of personnel for moving the appliance

Personnel eligible for moving the appliance:

- Only personnel who are trained in the use of a pallet truck and fork-lift truck for handling purposes are permitted to move the appliance.
- Personnel must be aware of the regulations relating to handling heavy loads.

Personal protective equipment

Wear the personal protective equipment specified in the section 'Personal protective equipment' on page 43 of the 'For your safety' chapter for the relevant tasks.

Moving heavy loads

⚠WARNING

Risk of injury from lifting incorrectly

When lifting the appliance, the weight of the appliance may lead to injuries, especially in the area of the torso.

- ▷ Use a fork-lift truck/pallet truck to move the appliance.
- ▷ When lifting the appliance, use enough people for the weight of the appliance (guide value: 15 to 55 kg max., depending on age and gender). Observe the local occupational safety regulations.
- ▷ Wear personal protective equipment.

Unsuitable supporting surface

⚠WARNING

Risk of crushing if the appliance tips over or falls off

Body parts can be crushed if the appliance tips over or falls off.

- ▷ Make sure that the appliance is never placed on an unsuitable supporting surface.

4.2 Moving the appliance to the installation location

Space required for conveying the appliance

Make sure that there is enough width and height along the entire route used for conveying the appliance to ensure it can get through to its installation location.

The table below shows the dimensions of the appliances including packaging, which are needed to determine the minimum doorway dimensions required to allow the appliance to be brought to its installation location:

		6.10	6.20	10.10	10.20	12.20	20.10	20.20
Width	[mm]	1100	1345	1100	1345	1410	1165	1410
Height	[mm]	1010	1010	1280	1280	1615	2150	2150
Depth	[mm]	940	1140	940	1140	1170	970	1170

Load bearing capability for conveying the appliance

Provide moving equipment that is rated capable of carrying the load.

Refer to the weight of the appliances including packaging to determine the minimum working load limit of handling equipment; see 'Dimensions and weights on page 121'.

Moving the appliance to the installation location

Please observe the following points when conveying the appliance:

- Always move the appliance on a pallet.
- Always move the appliance in an upright position.
- Move the appliance slowly and carefully, and secure it against tipping over.
  Make sure that you do not knock against things with the appliance.
  Avoid moving appliance along uneven routes or up or down steep slopes.

5 Setting up the appliance

Purpose of this chapter

This chapter provides information on how to set up your appliance.

This chapter is intended for the owner's member of staff responsible for the appliance and for a qualified member of staff from an authorized service company.

5.1 ⚠ Safe working when setting up the appliance

For your safety

Before starting work, familiarize yourself with the hazards described in 'Hazards and safety precautions when setting up the appliance' on page 28.

Eligibility of personnel for setting up the appliance

Only qualified personnel from an authorized service company are permitted to set up the appliance.

Regulations for setting up the appliance

Local and national standards and regulations relating to workplaces in catering kitchens must be observed.

The rules and regulations of the local authorities and supply companies that apply to the installation location concerned must be observed.

Personal protective equipment

Wear the personal protective equipment specified in the section 'Personal protective equipment' on page 43 of the 'For your safety' chapter for the relevant tasks.

Moving heavy loads

⚠WARNING

Risk of injury from lifting incorrectly

When lifting the appliance, the weight of the appliance may lead to injuries, especially in the area of the torso.

- ▷ Use a forklift truck or pallet truck to place the appliance in the installation position or to move it to a new position.
- ▷ To shift the appliance into the correct position, lift the appliance using enough people for the weight of the appliance (guide value: 15 to 55 kg max., depending on age and gender). Observe the local occupational safety regulations.
- ▷ Wear personal protective equipment.

Unsuitable supporting surface

⚠WARNING

Risk of crushing if the appliance tips over or falls off

Body parts can be crushed if the appliance tips over or falls off.

- ▷ Make sure that the appliance is never placed on an unsuitable supporting surface.

5.2 Adjacent systems

Dealing with the discharged air

During operation, the combi oven generates heat and moisture, which mainly escape upwards into the surrounding air as hot vapour from the air vent(s). It is not permitted to connect air ventilation pipes directly to an air vent of the combi oven.
The manufacturer recommends using a fume extractor hood or ceiling-fitted ventilation equipment to extract the discharged air from the room in which the combi oven is operating.
In order to avoid the risk of fire or other damage to the building such as corrosion, mould growth and/or reduced stability, there must be a sufficiently large distance between the top of the appliance and the ceiling. This distance depends on the following factors:

- For guidance on the minimum vertical clearance, see 'Requirements for the installation location' on page 48.
- Type of air-vent system
- the nature of the ceiling in the installation location

It is a fundamental requirement that the combi oven is always set up, installed and operated in accordance with national and local standards and regulations (in the latest version).
In addition, please observe the following regulations:

- VDI Directive 2052 "Ventilation equipment for kitchens"
- Guidance from the local building authority for fume extraction systems.

Dealing with exhaust gases for gas appliances

Exhaust gases at a temperature of up to 500 °C escape from the exhaust outlet(s) on the top of the combi oven into the surrounding air. It is not permitted to connect pipes directly to an exhaust outlet of the combi oven as a way of removing the exhaust gases.
It is mandatory to use a ventilation system with a safety cutout for evacuating the exhaust gas.
The combi oven has an exhaust gas extraction system that complies with standard EN 203 type A3 / B23.
In order to avoid the risk of fire, there must be no flammable materials above the appliance and there must be a sufficiently large distance between the top of the appliance and the ceiling. This distance depends on the following factors:

- For guidance on the minimum vertical clearance, see 'Requirements for the installation location' on page 48
- the type of air ventilation system and exhaust gas extraction system
- the nature of the ceiling in the installation location

It is a fundamental requirement that the combi oven is always set up, installed and operated in accordance with national and local standards and regulations (in the latest version).
In addition, please observe the following regulations:

- VDI Directive 2052 "Ventilation equipment for kitchens"
- Guidance from the local building authority for fume extraction systems

5.3 Requirements for the installation location

Meaning

This section contains information to help you choose a suitable installation location for the appliance. Inspect the intended installation location carefully to ensure it is suitable before bringing the appliance there and starting the installation.

⚠ Rules for setting up the appliance safely

To prevent hazards that arise from the installation site and environment of the appliances, the following rules must be observed:

- It must be possible to comply with the operating conditions. For operating conditions, see 'Requirements relating to the operating environment of the combi oven' on page 22.
- There is a risk of fire from the heat emitted from hot surfaces. Therefore there must not be any flammable materials, gases or liquids above, on, beneath or in the vicinity of the appliance. When choosing where to install the appliance it is essential to remember this requirement together with the information in the topic 'Adjacent systems' on page 47 and the minimum space required for the appliance.
- Heat sources in the vicinity must lie at a minimum distance of 500 mm.
- The appliance must be installed so that there is absolutely no possibility that liquid from the appliance or liquid coming from cooking processes can reach deep-fat fryers or appliances that use hot, uncovered fat. Deep-fat fryers or appliances that use hot, uncovered fat that are located in the vicinity must lie at a minimum distance of:
  - 1050 mm for table-top units of size X.10
  - 1450 mm for table-top units of size X.20
  - 1600 mm for floor-standing units
- Do not install the appliance directly under a fire alarm or sprinkler system. Fire alarm installations and sprinkler systems must be set up to handle the level of steam and vapour expected to escape from the appliance.
- For the standard model of the table-top unit, it must be possible to set up the appliance platform (work surface, stand or stacking kit) in the installation position in such a way that the appliance cannot tip over or shift. It must be possible to set up the standard model of the floor-standing unit at the installation location in such a way that it will not topple over or shift. The supporting surface must comply with requirements.
- For the marine model of the appliance, the supporting surface must comply with requirements. The marine model of the appliance must be fixed in the installation position by the correct accessories.
- For table-top units on a wheeled platform, a retaining device must be connected to limit the range of movement of the assembly (platform plus appliance) at the customer's site. The maximum distance that the platform plus appliance can be pulled out is 0.5 m.
  The lengths of the supply cables and pipes must accommodate the range of movement allowed by the retaining device. When moving the assembly, never strain or wheel over the supply cables and pipes.
- The standard model of the appliance must not be used in environments in which it could be subject to strong vibrations or mechanical shock (e.g. on vehicles or ships).
- For standard models of table-top units, vibrations must be avoided in general when using wheeled stands or wheeled stacking kits.
- The only appliance model permitted for use on ships is the marine model. This model of appliance must be screwed or welded to the floor using the appropriate parts.
- It is never permitted to install the marine model of the table-top unit on a wheeled stand or wheeled stacking kit.

Requirements for the supporting surface

The supporting surface must have the following properties:
- The supporting surface must be flat and horizontal.
- The supporting surface must be able to bear the weight of the appliance.
- For table-top units, the work surface or stand must have a load bearing capability that is equal to the empty weight plus the maximum permissible load.

The appliance weight depends on the model and fitted equipment and is made up of the following values:
- Weight of your combi oven when empty
- Maximum permissible loading weight
- Maximum weight of cleaning fluids when fitted with ConvoClean / ConvoClean+ system
- Weight of stand or worktop for table-top units

Add up the following individual weights to find the total appliance weight:

		6.10	6.20	10.10	10.20	12.20	20.10	20.20
Weight of combi oven when empty	[kg]	See weight excluding packaging in 'Dimensions and weights' on page 121						
Maximum permissible loading weight	[kg]	30	60	50	100	120	100	180
Maximum weight of cleaning agents	[kg]	20	20	20	20	20	20	20
Weight of stand (depends on model)	[kg]	20 - 50	30 - 65	20 - 50	30 - 65	-	-	-

Actual space requirements

Far more room than the specified space requirement is needed in front of the appliances to operate the combi ovens safely, in particular to handle hot food safely.

For the distance that is actually needed between the top of the combi oven and the ceiling, please refer to the topic 'Adjacent systems' on page 47.

Larger wall gaps are generally recommended to provide access for servicing.

In the installation location, the following parts must not be covered, obstructed or blocked (see also 'Design and function of the combi oven' on page 13):
- Air vent and exhaust outlet on the top of the appliance
- Ventilation port on the top of the appliance
- Ventilation holes in the appliance floor

Space required for right-hinged door - width and depth

The following diagram and table show the space required for the appliance for different installation and operating situations. They also show the minimum horizontal distances from adjacent walls and surfaces. The safety clearances on the left, right and rear must always be complied with.

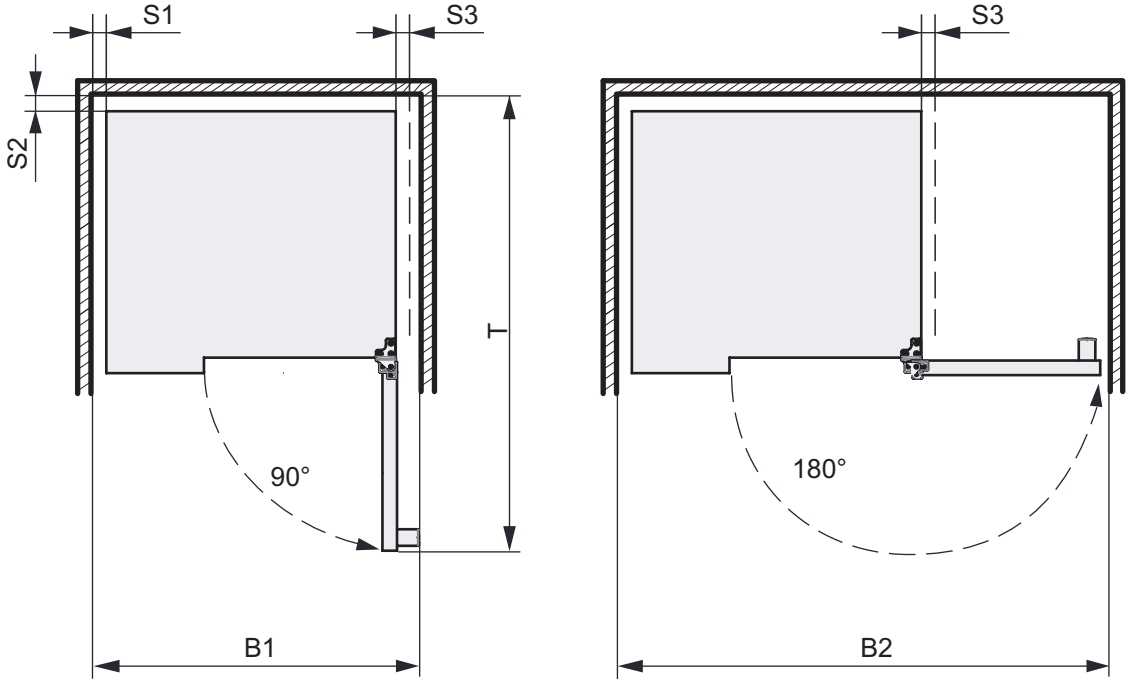

	Meaning		6.10	6.20	10.10	10.20	12.20	20.10	20.20
B1	Width requirement, appliance door open at 90°	[mm]	995	1240	995	1240	1309	1064	1309
B2	Width requirement, appliance door open at 180°	[mm]	1413	1863	1413	1863	1955	1505	1955
T	Depth requirement when opening the appliance door	[mm]	1379	1784	1379	1784	1835	1430	1835
S1	Safety clearance on left-hand side	[mm]	50	50	50	50	50	50	50
S2	Safety clearance at rear	[mm]	50	50	50	50	50	50	50
S3	Safety clearance on right-hand side	[mm]	50	50	50	50	50	50	50

Space required for disappearing door - width and depth

The following diagram and table show the space required for the appliance for different installation and operating situations. They also show the minimum horizontal distances from adjacent walls and surfaces. The safety clearances on the left, right and rear must always be complied with.

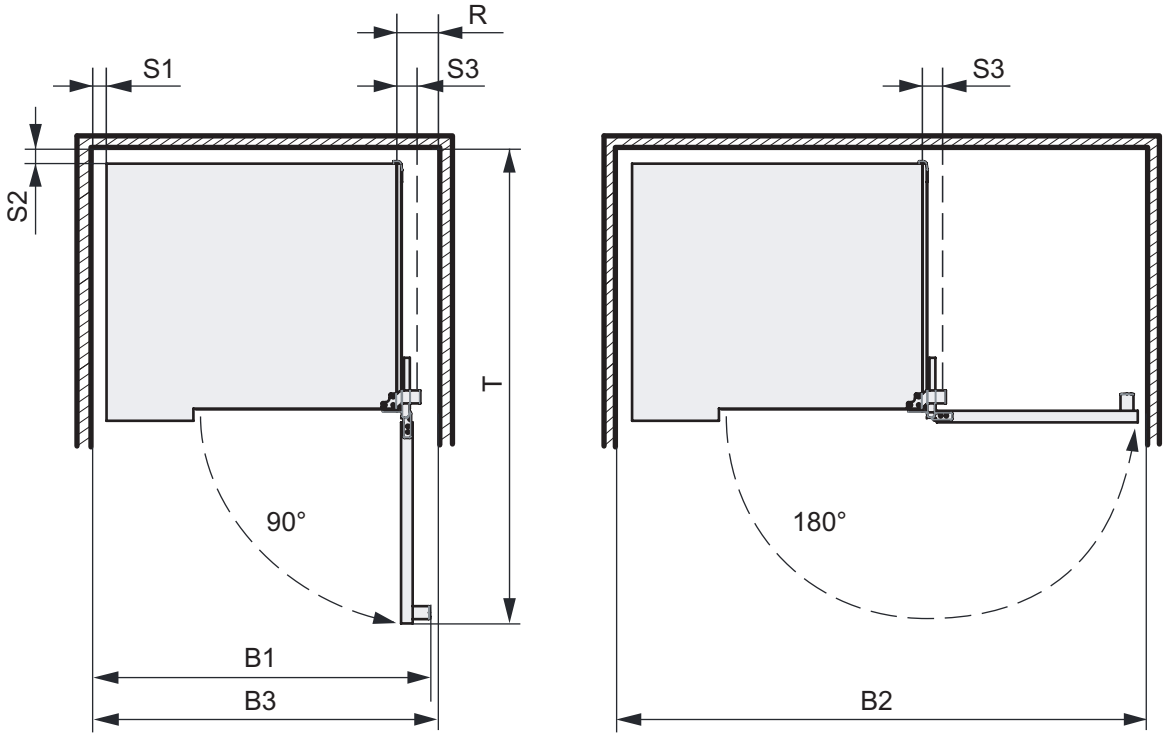

	Meaning		6.10	6.20	10.10	10.20	12.20	20.10	20.20
B1	Width requirement, appliance door open at 90°	[mm]	1052	1297	1052	1297	1338	1093	1338
B2	Width requirement, appliance door open at 180°	[mm]	1510	1960	1510	1960	2010	1560	2010
B3	Width requirement, disappearing door retracted	[mm]	1055	1300	1055	1300	1345	1100	1345
R	Space required on right-hand side, disappearing door retracted	[mm]	130	130	130	130	160	160	160
T	Depth requirement when opening the appliance door	[mm]	1419	1824	1419	1824	1860	1455	1860
S1	Safety clearance on left-hand side	[mm]	50	50	50	50	50	50	50
S2	Safety clearance at rear	[mm]	50	50	50	50	50	50	50
S3	Safety clearance on right-hand side	[mm]	50	50	50	50	50	50	50

Height requirement

The following diagram and table show the vertical space needed by the appliance:

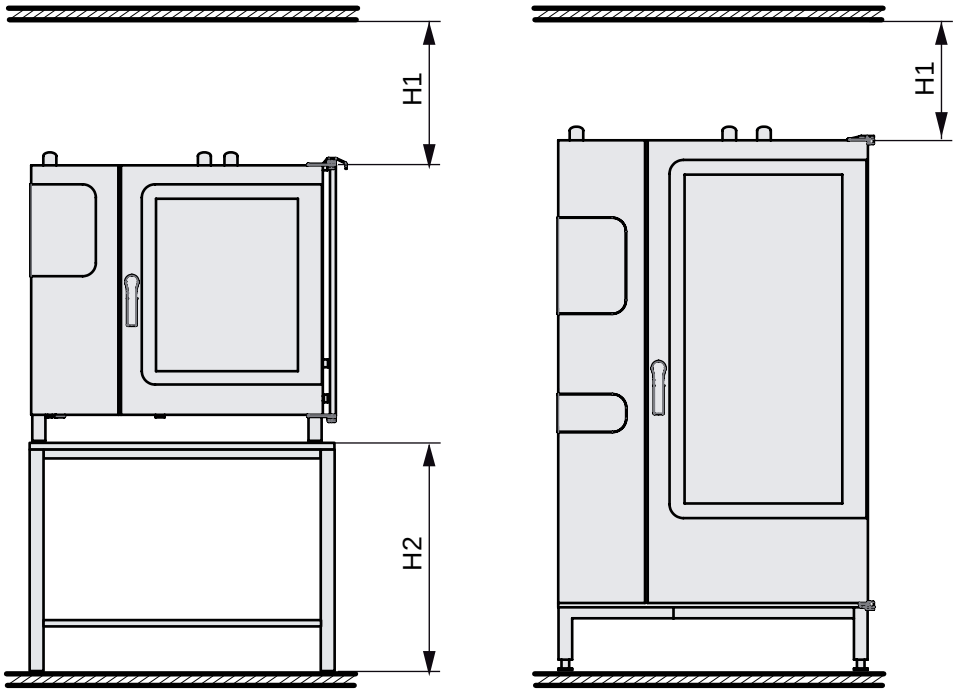

The service engineer who is responsible for setting up the appliance must take into account the nature of the ceiling and any adjacent systems that may be used (air ventilation system, vapour extractor hood etc.) when designing the particular clearance needed between the top of the appliance and the ceiling. In this context, the vertical distance H1 must be understood as a guide value for the minimum vertical clearance.

	Meaning		6.10	6.20	10.10	10.20	12.20	20.10	20.20
Electric appliances									
H1	Guide value for the minimum vertical clearance	[mm]	500	500	500	500	500	500	500
Gas appliances									
H1	Guide value for the minimum vertical clearance	[mm]	1000	1000	1000	1000	1000	1000	1000
Electric appliances and gas appliances									
H2	Installation height	[mm]	620 - 900	620 - 900	620 - 900	620 - 900	-	-	-

5.4 Unpacking

Unpacking the appliance (table-top units)

1.	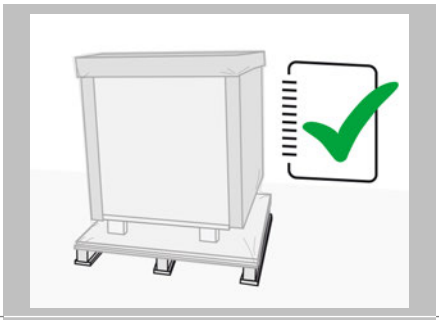	Inspect the appliance for damage before signing the delivery note. Record any damage on the delivery note and notify the carrier and manufacturer.
2.	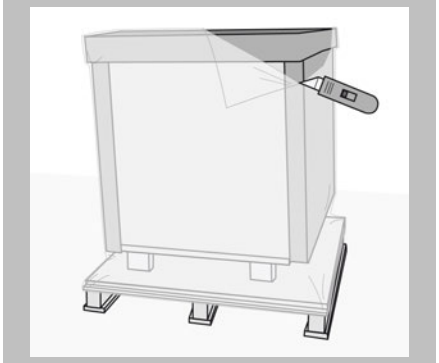	Use a cutting tool to cut open the stretch plastic cover from top to bottom along one of the corner pieces.
3.	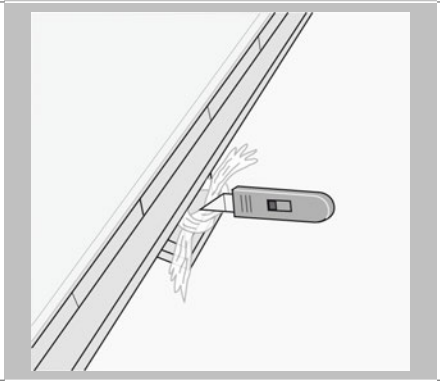	Cut the fastener holding the stretch plastic.

4.	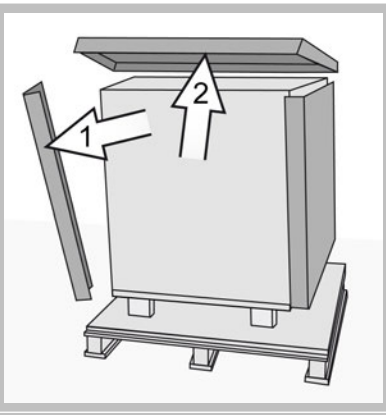	▪ Remove all the corner pieces one at a time by lifting up the top cover briefly at each corner. ▪ Then take the top cover off completely. ▪ Remove the customer documentation from the top of the appliance. ▪ Remove any additional protective films, cardboard packaging or transport securing devices etc. completely from the appliance.
5.	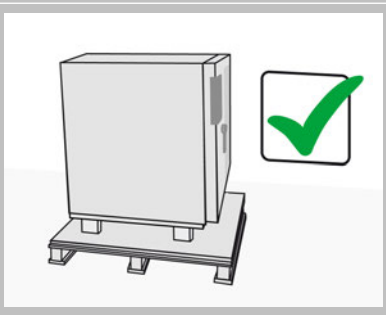	Inspect the appliance again for damage. If you suspect the appliance has been damaged during transit, notify your dealer/carrier immediately. Please notify the manufacturer in writing within three days. Never install or put into service a damaged appliance under any circumstances.

Unpacking the appliance (floor-standing units)

1.	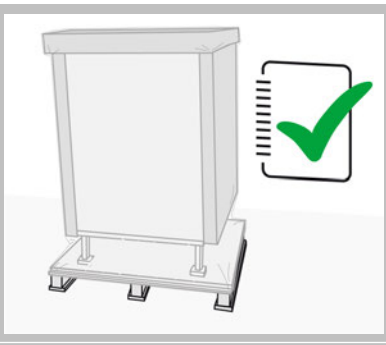	Inspect the appliance for damage before signing the delivery note. Record any damage on the delivery note and notify the carrier and manufacturer.
2.	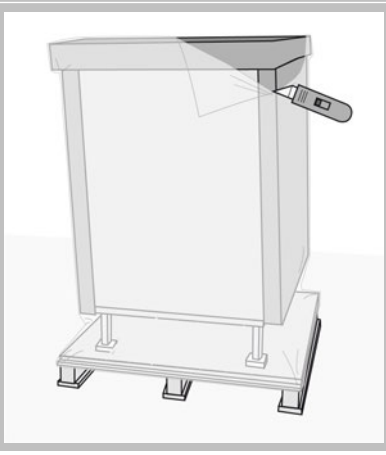	Use a cutting tool to cut open the stretch plastic cover from top to bottom along one of the corner pieces.

3.	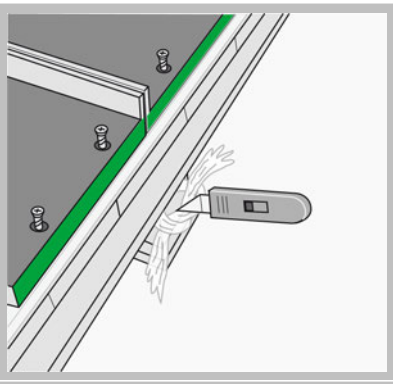	Cut the fastener holding the stretch plastic.
4.	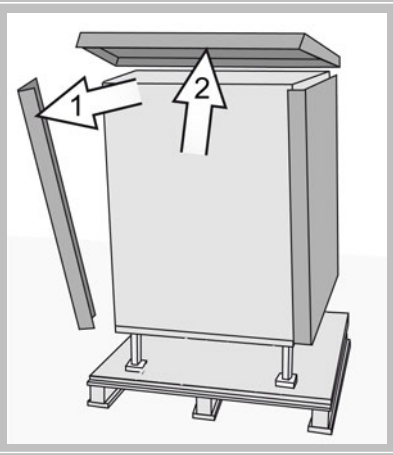	▪ Remove all the corner pieces one at a time by lifting up the top cover briefly at each corner. ▪ Then take the top cover off completely. ▪ Remove the customer documentation from the top of the appliance. ▪ Remove any additional protective films, cardboard packaging or transport securing devices etc. completely from the appliance.
5.	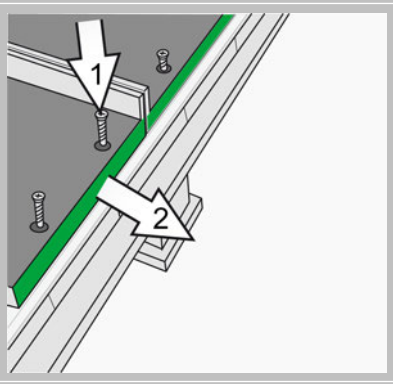	**Read first:** ▪ This step 5 is not needed for the floor-standing marine model. Undo the screw fastenings on the slides and pull the slides out. Keep the screws and slides to hand. **Additional information:** ▪ The slides will be used as a ramp for the appliance.
6.	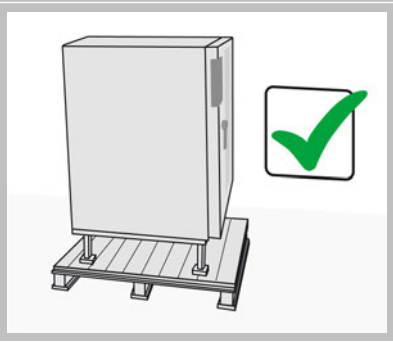	Inspect the appliance again for damage. If you suspect the appliance has been damaged during transit, notify your dealer/carrier immediately. Please notify the manufacturer in writing within three days. Never install or put into service a damaged appliance under any circumstances.

Contents

The following parts are supplied:

- 1x combi oven
- 1x left-hand rack (table-top units only)
- 1x right-hand rack (table-top units only)
- 1x loading trolley (floor-standing units only)
- 1x Installation manual
- 1x User manual (hardware)
- 1x Operating instructions (software)
- 1x empty canister (10 Litres) for cleaning agent (for easyDial controls, only for ConvoClean option)
- 1x flat bend for installing the drain connection (table-top units only)
- 1x empty canister for extracted grease (only for the Grill model)
- 1x connecting tube with attached screw-cap for grease collecting canister (only for the Grill model)

5.5 Taking the appliance off the pallet

Using lifting straps to take the appliance off the pallet (table-top units)

The weight of your appliance is given in the 'Technical Data' on page 120.

The diagram below shows a size 6.10 combi oven as an example of all table-top units:

1.		Attach the lifting straps to the appliance feet.
2.		To prevent it slipping off the pallet, the combi oven is held in place by studs on the pallet that extend into the appliance feet. You therefore need to lift the appliance off the pallet evenly by lifting all four appliance feet at once before placing the appliance in its installation location.
3.	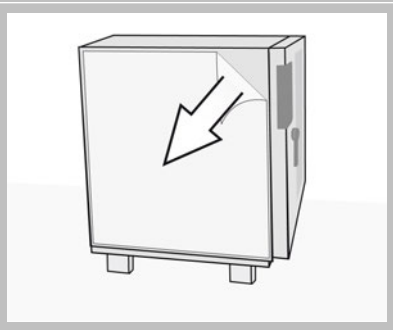	Remove the protective plastic from the combi oven.

Taking the appliance off the pallet (standard floor-standing unit)

1.	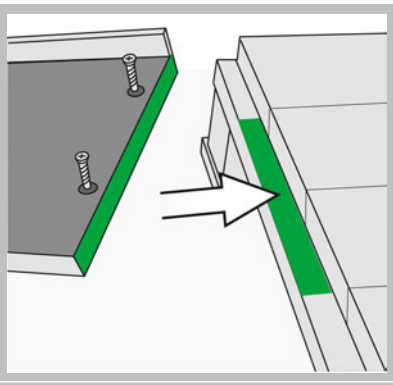	On one side of the appliance, place the slides on the green markers with the safety lip facing outwards in each case. Make sure that you push each slide right up against the pallet so that the screws have sufficient material to screw into.
2.	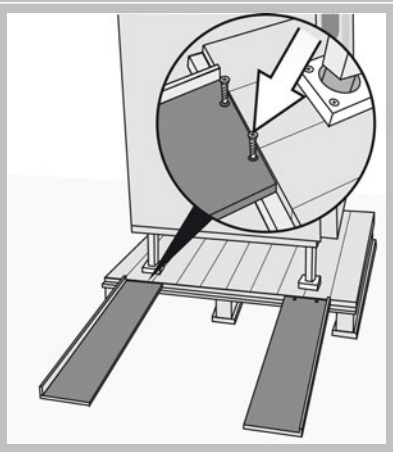	Screw the two slides onto the pallet.

3.	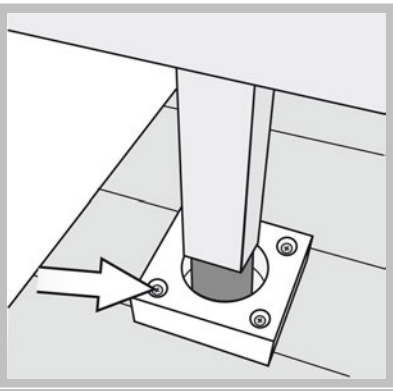	Remove all the screws from the slide blocks.
4.	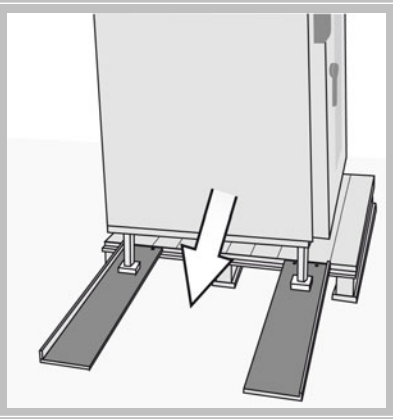	Use at least two people to slide the appliance, on the slide blocks, down the slides and onto the floor to the installation location. WARNING Risk of crushing from the appliance tipping over ▪ Before sliding the appliance off the pallet, make sure that the slides are screwed firmly to the pallet. ▪ Take care not to let an appliance foot slip off the side of the slide. ▪ Be careful when transferring the appliance from the slide onto the non-slip floor.
5.	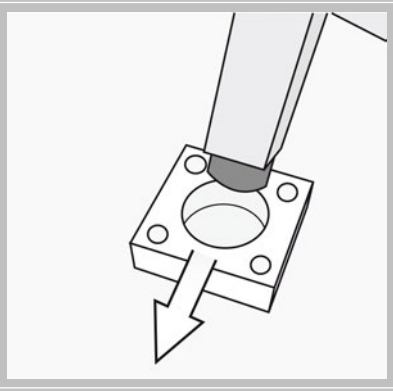	Lift up the combi oven slightly and remove the slide blocks.
6.	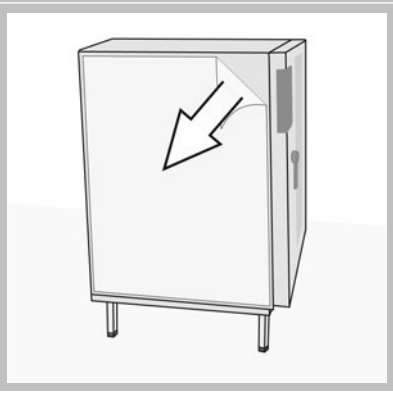	Remove the protective plastic from the combi oven.

Taking the appliance off the pallet (floor-standing units, marine model)

1.	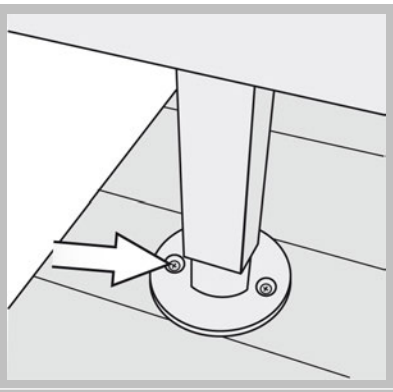	Remove the screws from the flanged feet of the appliance that hold the combi oven on the pallet.
2.	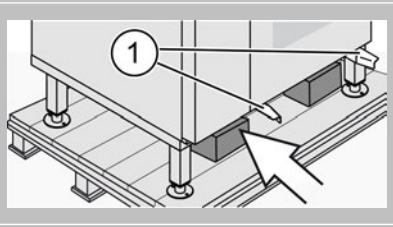	Use a forklift truck or pallet truck to pick up the appliance. ▪ To protect the wheel-in rail (1) for the loading trolley, insert two lengths of wood underneath the appliance according to the type of lifting gear you are using and the side from which you are lifting the appliance.
3.		Move the appliance carefully off the pallet to the installation location.
4.	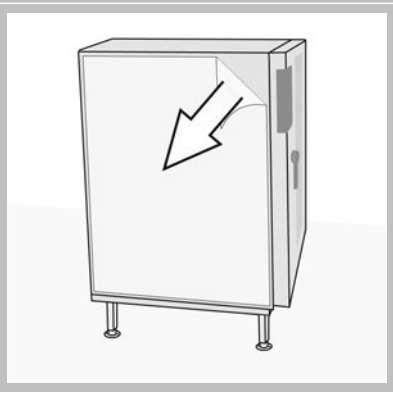	Remove the protective plastic from the combi oven.

5.6 Setting up a table-top unit on a work surface (standard model)

⚠ Rules for setting up the appliance safely

Observe the following rules to ensure that the appliance is installed in a stable situation:

- It must be possible to set up the worktable in the installation position so that it cannot tip over or slide about. The supporting surface must comply with requirements.
- The appliance must be installed on the worktable worktop so that it cannot tip over or slide about.
- If you intend to load the combi oven using mobile shelf racks or plate racks (does not apply to ConvoSmoke), the appliance must be installed at the same height as the loading height of the transport trolley. The roll-in frame inserted in the cooking chamber and the surface on which the mobile shelf rack / plate rack sits on the transport trolley must be at the same height when the transport trolley is attached to the combi oven.
  It must be possible to wheel the transport trolley up to the cooking chamber and to fix it to the roll-in frame on a horizontal surface that is clear of obstructions.

Setting up the appliance on a worktable

1.	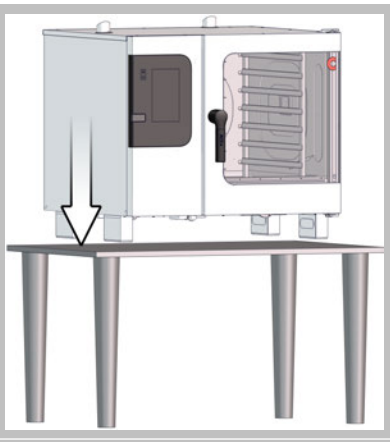	Position the appliance on the worktable.
2.	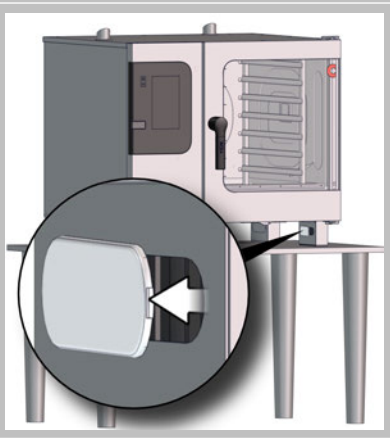	Remove the cover from the appliance foot.

3.	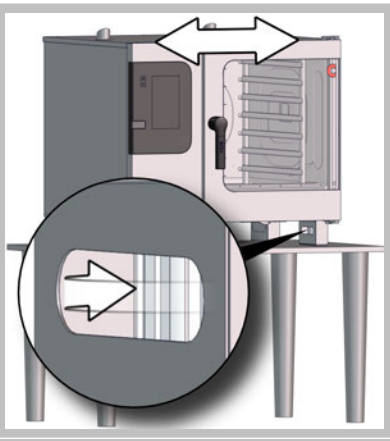	Use the adjusting screw to level the appliance until it is seated horizontally. Use the foot-adjustment tool or an adjustable pipe wrench to adjust the adjusting screw, and a spirit level to check all horizontal surfaces are level. The absolute tilt of the appliance in operation must not exceed max. 2° (3.5%). **Additional information:** The foot-adjustment tool is included with the customer documentation
4.	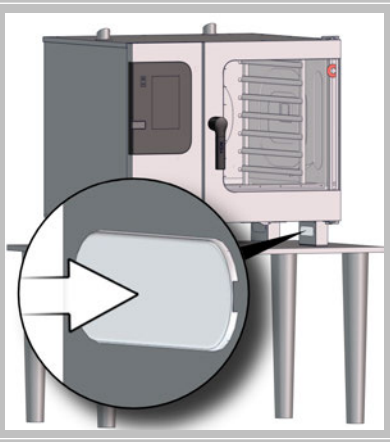	Refit the cover on the appliance foot.
5.	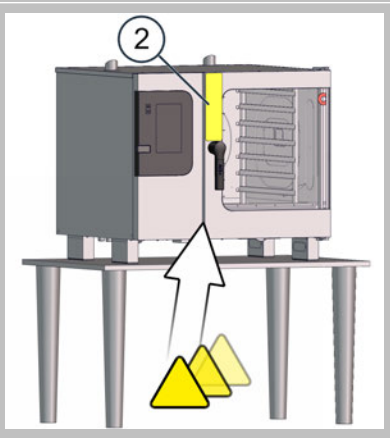	Stick the necessary warning labels in the specified positions. Make sure that the surface is clean of oil and grease before sticking the warning label in place. **Additional information:** you can find the warning labels inside the cooking chamber.

Type and position of the warning sign stickers to be attached

The following warning signs must be attached to the combi oven in the specified positions:

Warning sign	Position on the combi oven
	Somewhere on the left side of the appliance door in area 2 (see 'Warning signs on the combi oven' on page 23) depending on the installation situation Directly above the door handle if ▪ the top of the appliance lies above 1.20 m or ▪ personnel are mainly semi-skilled staff (recommended) Right at the top of the appliance door if ▪ the top of the appliance does not lie above 1.20 m
	On the left side of the appliance door in area 2 (see 'Warning signs on the combi oven' on page 23) at a height of 1.60 m above the kitchen floor.

5.7 Setting up a table-top unit on a work surface (marine model)

⚠ Rules for setting up the appliance safely

Observe the following rules to ensure that the appliance is installed in a stable situation:

- The appliance must be screwed or welded to the worktable using the appropriate parts.
- The worktable must be screwed or welded to the floor.
- If you intend to load the combi oven using mobile shelf racks or plate racks, the appliance must be installed at the same height as the loading height of the transport trolley. The roll-in frame inserted in the cooking chamber and the surface on which the mobile shelf rack / plate rack sits on the transport trolley must be at the same height when the transport trolley is attached to the combi oven.
  It must be possible to wheel the transport trolley up to the cooking chamber and to fix it to the roll-in frame on a horizontal surface that is clear of obstructions.

Setting up the appliance on a worktable

1.	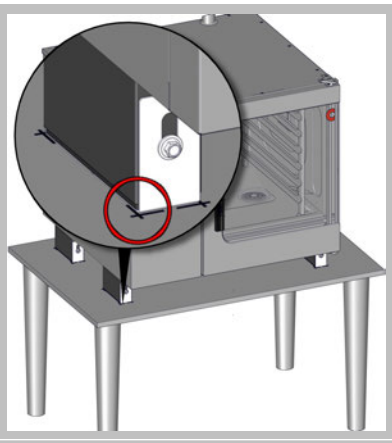	Position the appliance on the worktable, and on the work-top make a precise mark at the corners of each bracket on each appliance foot.
2.	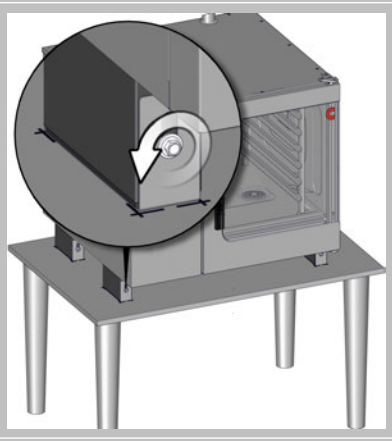	Remove both brackets from all four appliance feet by un-screwing the relevant screw in each case.
3.	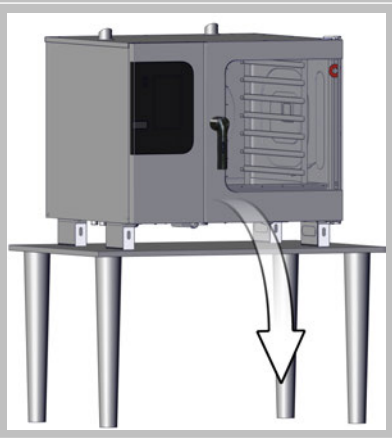	Take the appliance off the worktable.

4.	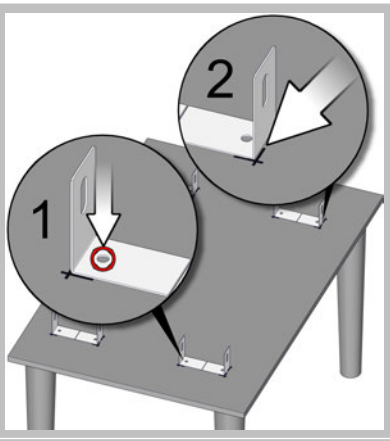	Place the brackets in the positions shown by your marks. Fix all the brackets permanently to the worktable, either by screwing (1) or welding (2) depending on the design of the tabletop.
5.	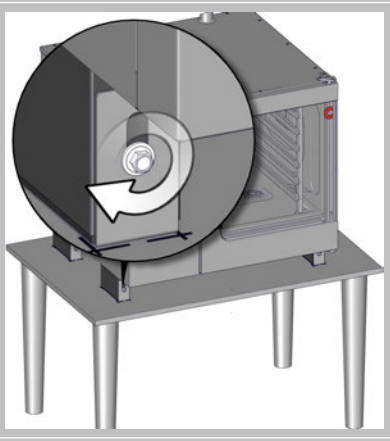	Place the appliance in the brackets fixed on the worktable and screw the screws back in without tightening.
6.	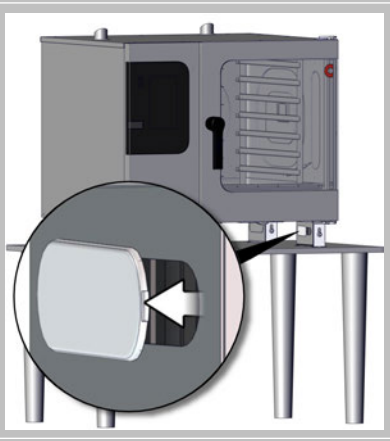	Remove the cover from the appliance foot.
7.	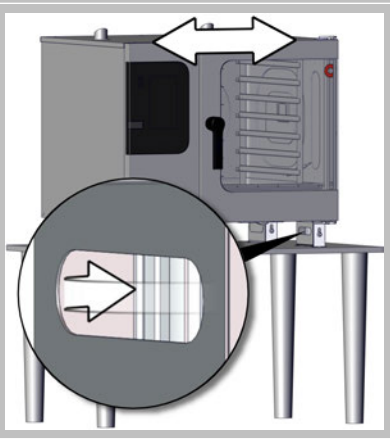	Use the adjusting screw to level the appliance until it is seated horizontally. Use the foot-adjustment tool or an adjustable pipe wrench to adjust the adjusting screw, and a spirit level to check all horizontal surfaces are level. The absolute tilt of the appliance in operation must not exceed max. 2° (3.5%). **Additional information:** The foot-adjustment tool is included with the customer documentation

8.	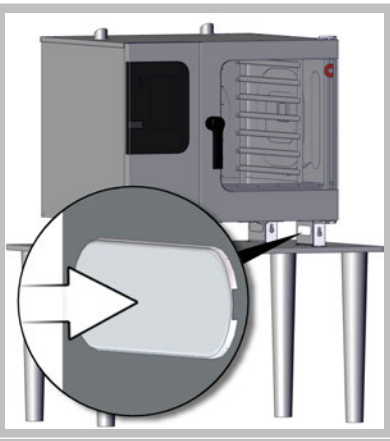	Refit the cover on the appliance foot.
9.	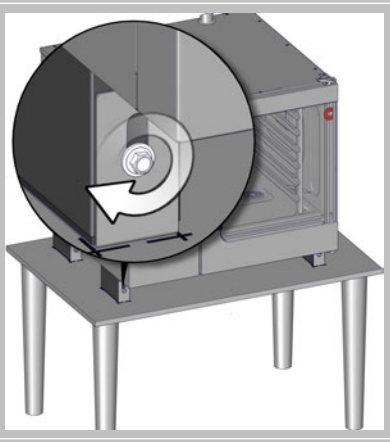	Tighten the screws on the brackets for the appliance feet.
10.	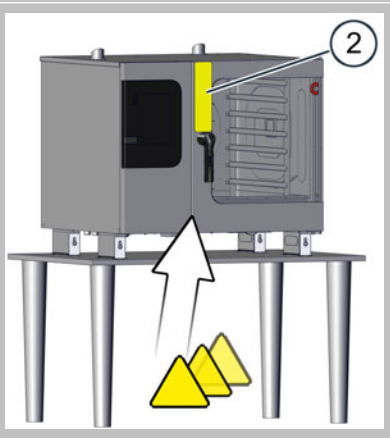	Stick the necessary warning labels in the specified positions. Make sure that the surface is clean of oil and grease before sticking the warning label in place. **Additional information:** you can find the warning labels inside the cooking chamber.

Type and position of the warning sign stickers to be attached

The following warning signs must be attached to the combi oven in the specified positions:

Warning sign	Position on the combi oven
	Somewhere on the left side of the appliance door in area 2 (see 'Warning signs on the combi oven' on page 23) depending on the installation situation Directly above the door handle if ▪ the top of the appliance lies above 1.20 m or ▪ personnel are mainly semi-skilled staff (recommended) Right at the top of the appliance door if ▪ the top of the appliance does not lie above 1.20 m
	On the left side of the appliance door in area 2 (see 'Warning signs on the combi oven' on page 23) at a height of 1.60 m above the kitchen floor.

5.8 Setting up a table-top unit on a stand (standard model)

⚠ Rules for setting up the appliance safely

Observe the following rules to ensure that the appliance is installed in a stable situation:

- It must be possible to set up the stand in the installation position so that it cannot tip over or slide about. The supporting surface must comply with requirements.
- If you intend to load the combi oven using mobile shelf racks or plate racks (does not apply to ConvoSmoke), the appliance must be installed at the same height as the loading height of the transport trolley. This is automatically the case if the surface for wheeling up the transport trolley lies at the same level as the surface on which the combi oven stand is installed.
  It must be possible to wheel the transport trolley up to the cooking chamber and to fix it to the roll-in frame on a horizontal surface that is clear of obstructions.

The following rules must be observed to meet hygiene standards:

- For stands that contain shelf levels for food containers, the top cover must be fitted on the stand to prevent dirt getting onto any food held temporarily in the stand.

Setting up the appliance on a stand

1.	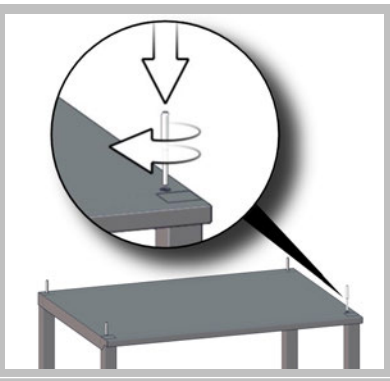	Screw the threaded bolts into the threaded holes provided in the oven stand and tighten the threaded bolts with the screwdriver.
2.	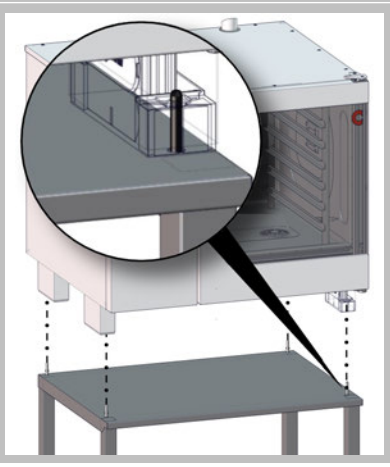	Position the appliance on the stand. Make sure that all four bolts are guided into the locating holes in the appliance feet provided for the purpose.

3.	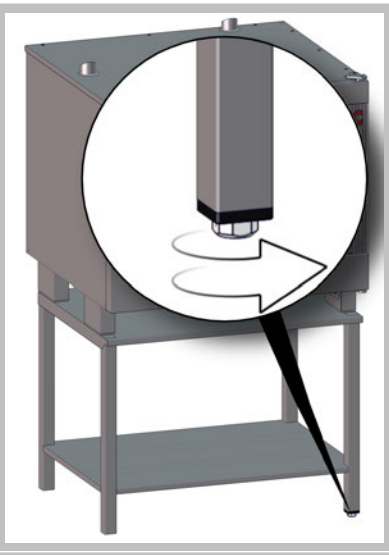	Ensure the stand is horizontal by adjusting the height of the feet. Use a spirit level to ensure the unit is horizontal in all directions. The absolute tilt of the appliance in operation must not exceed max. 2° (3.5%).
4.	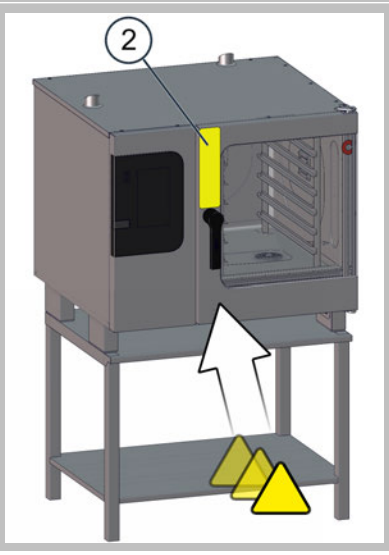	Stick the necessary warning labels in the specified positions. Make sure that the surface is clean of oil and grease before sticking the warning label in place. **Additional information:** you can find the warning labels inside the cooking chamber.

Type and position of the warning sign stickers to be attached

The following warning signs must be attached to the combi oven in the specified positions:

Warning sign	Position on the combi oven
	Somewhere on the left side of the appliance door in area 2 (see 'Warning signs on the combi oven' on page 23) depending on the installation situation Directly above the door handle if ▪ the top of the appliance lies above 1.20 m or ▪ personnel are mainly semi-skilled staff (recommended) Right at the top of the appliance door if ▪ the top of the appliance does not lie above 1.20 m
	On the left side of the appliance door in area 2 (see 'Warning signs on the combi oven' on page 23) at a height of 1.60 m above the kitchen floor.

5.9 Setting up a table-top unit on a stand (marine model)

⚠ Rules for setting up the appliance safely

Observe the following rules to ensure that the appliance is installed in a stable situation:

- The appliance must be screwed or welded to the stand using the appropriate parts.
- The stand must be screwed or welded to the floor using the appropriate parts.
- If you intend to load the combi oven using mobile shelf racks or plate racks, the appliance must be installed at the same height as the loading height of the transport trolley. This is automatically the case if the surface for wheeling up the transport trolley lies at the same level as the surface on which the combi oven stand is installed.
  It must be possible to wheel the transport trolley up to the cooking chamber and to fix it to the roll-in frame on a horizontal surface that is clear of obstructions.

The following rules must be observed to meet hygiene standards:

- For stands that contain shelf levels for food containers, the top cover must be fitted on the stand to prevent dirt getting onto any food held temporarily in the stand.

Setting up the appliance on a stand

1.	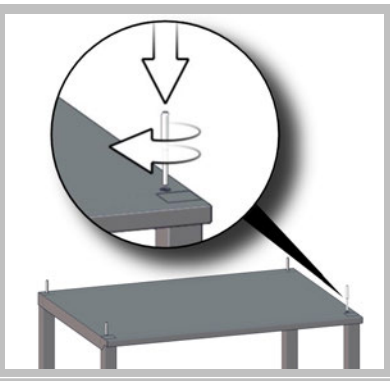	Screw the threaded bolts into the threaded holes provided in the oven stand and tighten the threaded bolts with the screwdriver.
2.	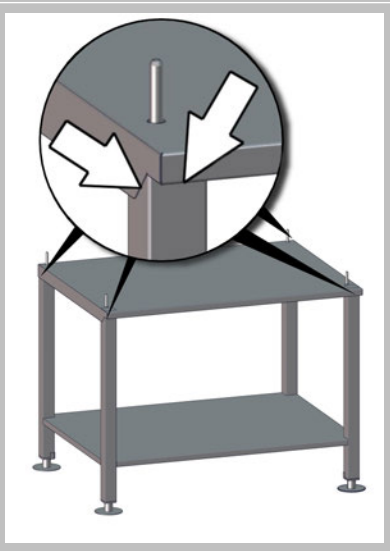	Weld the top cover along the connecting edges to all four legs of the stand.

3.	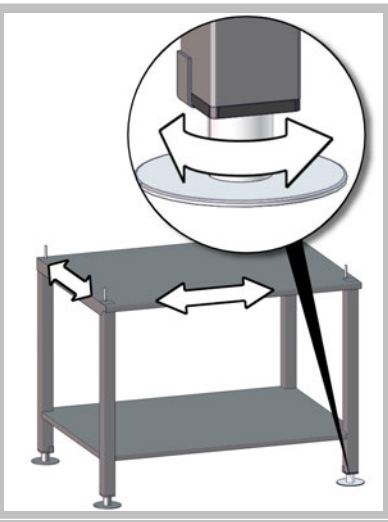	Ensure the stand is horizontal in the installation location by adjusting the height of the feet. Use a spirit level to ensure it is horizontal in all directions.
4.	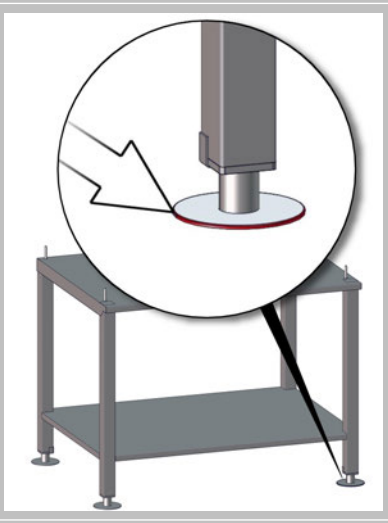	Fix the stand permanently to the floor by its flanged feet, e.g by welding.
5.	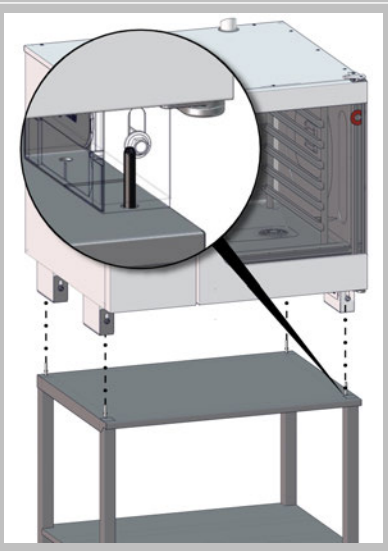	Position the appliance on the stand. Make sure that all four bolts are guided into the locating holes in the appliance feet provided for the purpose.

6.	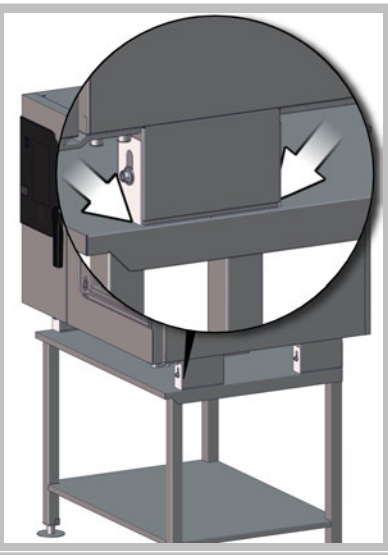	Weld the brackets (screwed to the appliance feet) permanently onto the top cover along the edges shown.
7.	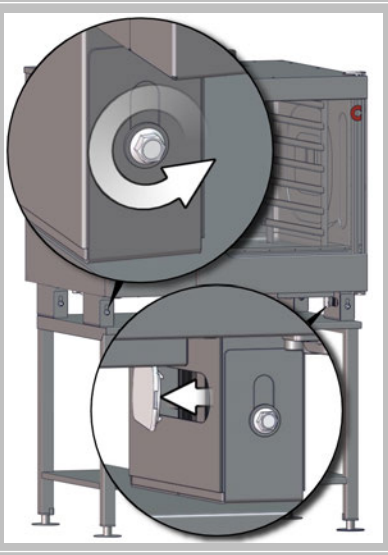	Tighten all 8 screws on the brackets for the appliance feet, and remove the covers from the side of the appliance feet.
8.	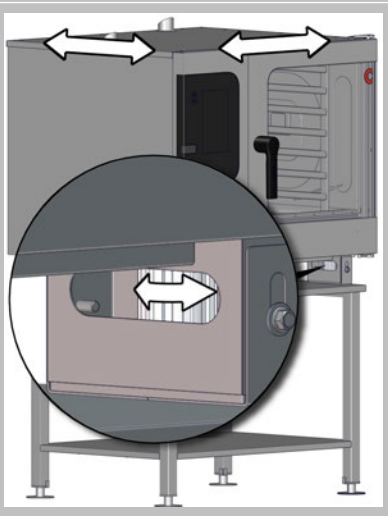	Use the adjusting screw to level the appliance until it is seated horizontally. Use the foot-adjustment tool or an adjustable pipe wrench to adjust the adjusting screw, and a spirit level to check all horizontal surfaces are level. The absolute tilt of the appliance in operation must not exceed max. 2° (3.5%). **Additional information:** The foot-adjustment tool is included with the customer documentation

9.	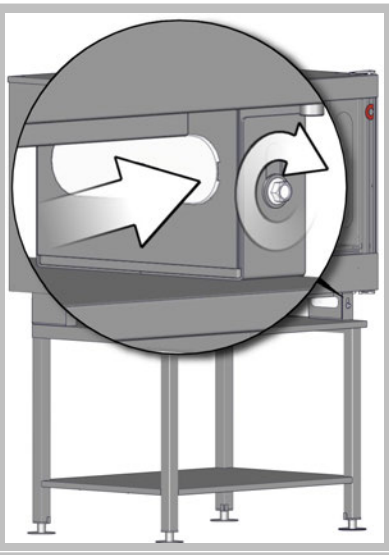	Refit the covers on the appliance feet and tighten the screws on the brackets for the appliance feet.
10.	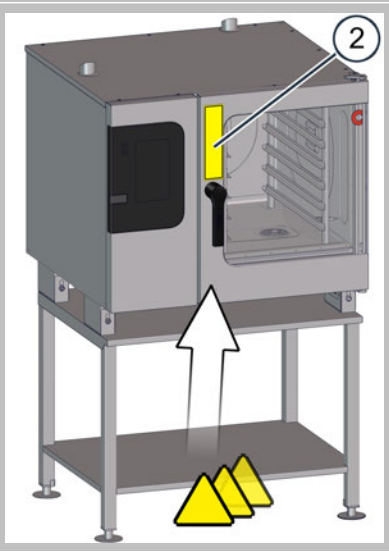	Stick the necessary warning labels in the specified positions. Make sure that the surface is clean of oil and grease before sticking the warning label in place. **Additional information:** you can find the warning labels inside the cooking chamber.

Type and position of the warning sign stickers to be attached

The following warning signs must be attached to the combi oven in the specified positions:

Warning sign	Position on the combi oven
	Somewhere on the left side of the appliance door in area 2 (see 'Warning signs on the combi oven' on page 23) depending on the installation situation Directly above the door handle if ▪ the top of the appliance lies above 1.20 m or ▪ personnel are mainly semi-skilled staff (recommended) Right at the top of the appliance door if ▪ the top of the appliance does not lie above 1.20 m
	On the left side of the appliance door in area 2 (see 'Warning signs on the combi oven' on page 23) at a height of 1.60 m above the kitchen floor.

5.10 Setting up a table-top unit on a wheeled stand

⚠ Rules for setting up the appliance safely

Observe the following rules to ensure that the appliance is installed in a stable situation:

- It must be possible to set up the stand in the installation position so that it cannot tip over or slide about. The supporting surface must comply with requirements.
- For table-top units on a wheeled platform, a retaining device must be connected to limit the range of movement of the assembly (platform plus appliance) at the customer's site. The maximum distance that the platform plus appliance can be pulled out is 0.5 m.
  The lengths of the supply cables and pipes must accommodate the range of movement allowed by the retaining device. When moving the assembly, never strain or wheel over the supply cables and pipes.
- If you intend to load the combi oven using mobile shelf racks or plate racks (does not apply to ConvoSmoke), the appliance must be installed at the same height as the loading height of the transport trolley. This is automatically the case if the surface for wheeling up the transport trolley lies at the same level as the surface on which the combi oven stand is installed.
  It must be possible to wheel the transport trolley up to the cooking chamber and to fix it to the roll-in frame on a horizontal surface that is clear of obstructions.

The following rules must be observed to meet hygiene standards:

- For stands that contain shelf levels for food containers, the top cover must be fitted on the stand to prevent dirt getting onto any food held temporarily in the stand.

Materials required

- A suitable part that can be bolted to a permanent fixture at the customer's premises as an anchoring point and to which a suitable retaining mechanism can be fastened.
  This may be an eyebolt, for instance, which is bolted into a wall plug in a hole drilled into the building wall behind the combi oven.
  The part bolted onto the customer's building must be able to withstand the tensile stresses that can arise from the weight of the assembly and the forces exerted by the operator when moving the combi oven on the wheeled stand.
- A suitable retaining mechanism, which can be connected to the anchoring point and to the fixing eyelet on the stand.
  This may be a safety chain with a carabiner catch at each end, for instance.
  The retaining mechanism must be able to withstand the tensile stresses that can arise from the weight of the assembly and the forces exerted by the operator when moving the combi oven on the wheeled stand.
  The length of the retaining mechanism must be chosen in conjunction with the positions of the anchoring point and the fixing eyelet on the stand such that the combi oven cannot move further than 0.5 m maximum.

Requirements

The anchoring point must be installed on the customer's building before setting up the stand on castors.
The position of the anchoring point must be chosen in conjunction with the length of the retaining mechanism and the fixing point on the assembly such that the combi oven cannot move further than 0.5 m maximum.
Ideally, the anchoring point is located directly behind, and at the same height as, the fixing eyelet on the stand.

Setting up the appliance on a wheeled stand

1.		Position the wheeled stand in the installation location and level it so that the absolute tilt of the appliance in operation does not exceed max. 2° (3.5%).
2.	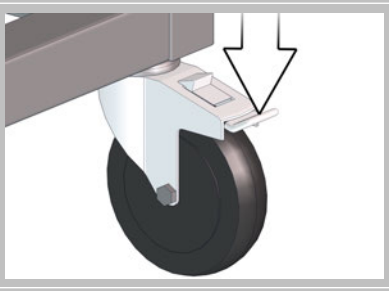	Lock the parking brakes on the stand.
3.	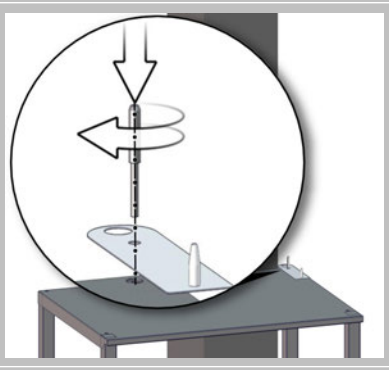	Decide which corner of the stand to use for attaching the retaining mechanism. Screw the bracket containing the fixing eyelet into the threaded hole provided in this corner of the stand. The bracket must lie parallel to the edge of the stand with the eyelet end pointing to the rear. Use the screwdriver to tighten the threaded bolt.
4.	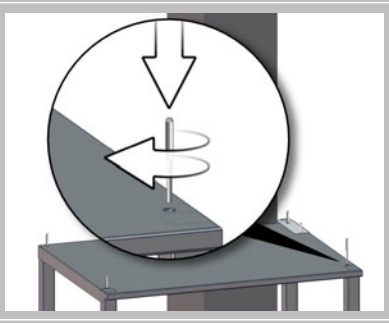	Screw the other three threaded bolts into the threaded holes provided in the oven stand and tighten the threaded bolts with the screwdriver.
5.	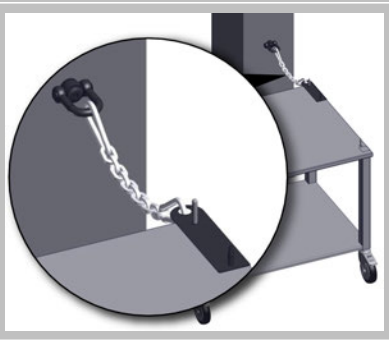	Connect the retaining device, which restricts the degree of movement of the wheeled stand.

6.	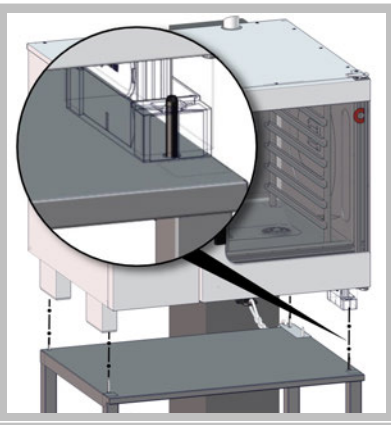	Position the appliance on the stand. Make sure that all four bolts and the pin on the bracket are guided into the locating holes in the appliance feet provided for the purpose.
7.	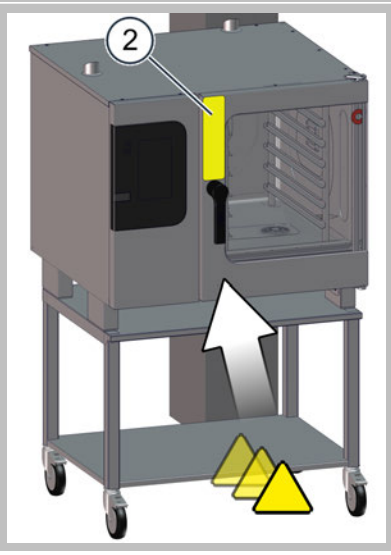	Stick the necessary warning labels in the specified positions. Make sure that the surface is clean of oil and grease before sticking the warning label in place. **Additional information:** you can find the warning labels inside the cooking chamber.

Type and position of the warning sign stickers to be attached

The following warning signs must be attached to the combi oven in the specified positions:

Warning sign	Position on the combi oven
	Somewhere on the left side of the appliance door in area 2 (see 'Warning signs on the combi oven' on page 23) depending on the installation situation Directly above the door handle if ▪ the top of the appliance lies above 1.20 m or ▪ personnel are mainly semi-skilled staff (recommended) Right at the top of the appliance door if ▪ the top of the appliance does not lie above 1.20 m
	On the left side of the appliance door in area 2 (see 'Warning signs on the combi oven' on page 23) at a height of 1.60 m above the kitchen floor.
	On the left side of the appliance door in area 2 (see 'Warning signs on the combi oven' on page 23)
	On the left side of the appliance door in area 2 (see 'Warning signs on the combi oven' on page 23)

5.11 Setting up a floor-standing unit on the floor (standard model)

⚠ Rules for setting up the appliance safely

Observe the following rules to ensure that the appliance is installed in a stable situation:

- It must be possible to set up the appliance in the installation position so that it cannot tip over or slide about. The supporting surface must comply with requirements.
- It must be possible to wheel the loading trolley up to the cooking chamber on a flat surface that is clear of obstructions.

Setting up the appliance

1.		Position the appliance on the floor.
2.	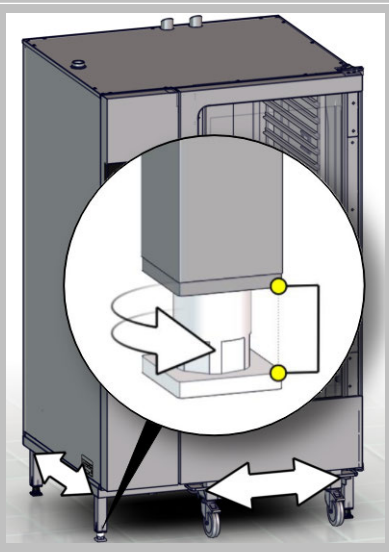	Ensure the appliance is horizontal by adjusting the height of the appliance feet. Use a spirit level to ensure the unit is horizontal in all directions. Make sure that the loading trolley can move freely into the appliance and stands horizontally in the appliance. The absolute tilt of the appliance in operation must not exceed max. 2° (3.5%).

5.12 Setting up a floor-standing unit on the floor (marine model)

⚠ Rules for setting up the appliance safely

Observe the following rules to ensure that the appliance is installed in a stable situation:

- The appliance must be screwed or welded to the floor using the appropriate parts.
- It must be possible to wheel the loading trolley up to the cooking chamber on a flat surface that is clear of obstructions.

Setting up the appliance

1.	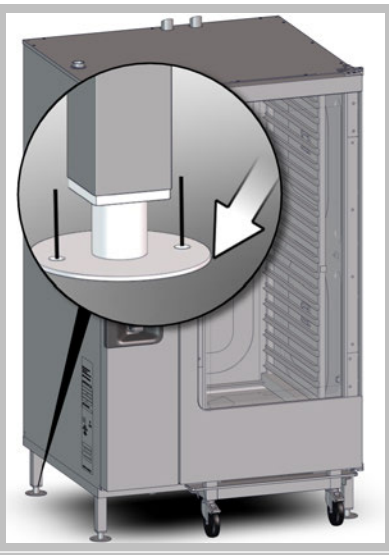	Place the appliance in position and fix the four flanged feet permanently to the floor by screw-fastening or welding.
2.	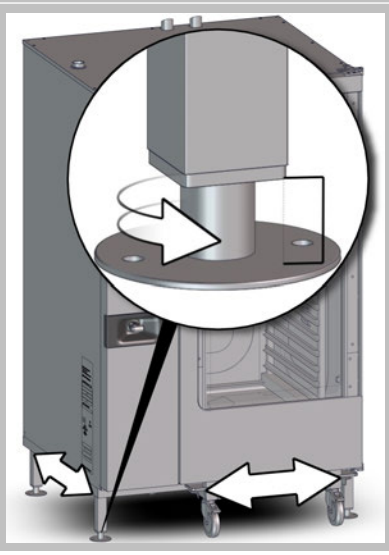	Ensure the appliance is horizontal by adjusting the height of the appliance feet. Use a spirit level to ensure the unit is horizontal in all directions. Make sure that the loading trolley can move freely into the appliance and stands horizontally in the appliance. The absolute tilt of the appliance in operation must not exceed max. 2° (3.5%).

6 Installation

Purpose of this chapter

This chapter explains how to connect your combi oven. This chapter is intended for a qualified electrician from an authorized service company, a qualified and certified gas installation engineer with appliance-specific training who has been authorized by the local gas supply company, a qualified plumber from an authorized service company and a qualified member of staff from an authorized service company.

6.1 Electrical installation

6.1.1 ⚠ Safe working during electrical installation

For your safety

Before starting work, familiarize yourself with the hazards described in 'Hazards and safety precautions during installation' on page 29.

Eligibility of personnel for the electrical installation

Only electricians from an authorized service company who are qualified and certified under the terms of EN 50110-1 or in accordance with applicable national and local regulations are permitted to perform work on electrical equipment.

Personal protective equipment

Wear the personal protective equipment specified in the section 'Personal protective equipment' on page 43 of the 'For your safety' chapter for the relevant tasks.

Regulations for the electrical installation

Observe the following requirements to prevent hazards caused by faulty electrical connections:

- The electrical supply must be connected in accordance with German VDE requirements (0100/0700) and/or with applicable local regulations of the professional associations and of the relevant utility.

Live parts

⚠DANGER

Risk of electric shock from live parts and loose cables

When the safety cover is open, there is a risk of electric shock from touching live parts.

- ▷ Make sure that any work on the electrical system is performed solely by a qualified electrician from an authorized service company.
- ▷ Before removing the safety covers:
  - Switch off all connections to the power supply.
  - Take protective measures at every power switch to ensure that the power cannot be switched on again.
  - If the appliance has previously been connected to the electricity supply, wait 15 minutes to allow the DC bus capacitors to discharge.
  - Make sure that the appliance is de-energized.
- ▷ Make sure that the electrical connections are intact and connected securely before putting the appliance into service.
- ▷ Before putting the appliance into service, make sure that the appliance, including all metallic accessories, is connected to an equipotential bonding system.

6.1.2 Planning the electrical installation

Meaning

It is crucial to the safe and reliable operation of the appliance that the electrical system is installed carefully and correctly. All the rules and regulations listed here, and the described procedure, must be strictly followed.

⚠ Rules for safe electrical installation of the appliances

Observe the following rules to prevent hazards caused by faulty electrical connections:

- The case of the appliance must be grounded in a suitable manner and connected to an equipotential bonding system.
- If two table-top units are installed in a stacking kit, both cases of the appliances and the stacking kit itself must be grounded in a suitable manner and connected to an equipotential bonding system.
- For table-top units with a wheeled platform, the power supply cable must be fed through a flexible cable conduit.
- The lengths of the power supply cable and the flexible cable conduit must accommodate the range of movement allowed to the appliance by the retaining device of the wheeled platform. When moving the assembly (platform plus appliance), never strain or wheel over the mains supply cable. This also applies to any other electrical cables between the combi oven and optional equipment such as the signal tower.
- All electrical connections must be checked when the appliance is put into service to ensure cables are laid correctly and connections are made properly.

Equipment provided by customer and electrical installation regulations

The table below shows what equipment must be provided by the customer and what regulations must be observed when connecting the appliance.

Equipment	Regulations
Fuse	Fuse protection and connection of the appliance must comply with local regulations and national installation requirements.
Equipotential bonding	The appliance must be incorporated in an equipotential bonding system. Equipotential bonding: electrical connection that ensures that the frames of electrical equipment and any external conductive components are at an equal (or practically equal) potential.
Ground fault circuit interrupter (GFCI)	If the installation regulations require protection by a residual-current device (RCD), then suitable residual-current devices meeting the relevant national regulations must be used. If the installation includes more than one appliance, one residual-current device must be provided for each appliance.
Disconnection device	An easily accessible all-pole disconnection device with a minimum contact separation of 3 mm must be installed close to the appliance. The appliance must be connected via this disconnection device. The disconnection device is used to disconnect the appliance from the electrical supply for cleaning, repair and installation work.

Recommended residual-current device

The appliance is fitted with one frequency converter (FC) or with two frequency converters (appliances of size 20.10 and 20.20) with built-in EMC filter and an EMC mains input filter. These devices may result in a leakage current of more than 3.5 mA per variable frequency drive.

Use a suitable RCD for the rated voltage:

Frequency converter (single phase)	Frequency converter (three phase)
Rated voltage	
3N~ 400V 50/60Hz	3~ 400 V 50/60Hz
3~ 230 V 50/60Hz	3~ 440 V 60 Hz
3~ 200 V 50/60Hz	3~ 480 V 60 Hz
1N~ 230V 50/60Hz	-
1N~ 100V 50/60Hz	-
1N~ 120V 60Hz	-
2~ 230 V 50/60Hz	-
Recommended residual-current device	
Type A	Type B/F
Optional residual-current device	
Type B/F	-

Properties of the residual-current device

The residual-current device (RCD) must have the following properties:

- Filter for filtering out RF currents
- "Time delayed" trip characteristic for RCD devices with trip threshold >30 mA:
  prevents RCD being tripped by charging currents of capacitors and parasitic capacitances when appliance is switched on.
- "Leakage current protection, type SI" trip characteristic for RCD devices with trip threshold ≤30 mA:
  insensitive to nuisance tripping.

Mains supply connection

The power cord must be an oil-resistant, sheathed and flexible cable in accordance with IEC 60245 (e.g. H05RN-F, H07RN-F). A maximum cable length of 5 m is recommended.

For table-top units with a wheeled platform, the power supply cable must be fed through a flexible, oil-resistant and watertight cable conduit (such as a Hellermann PSRSC12 PVC protective conduit) that complies with local regulations. The lengths of the power supply cable and the flexible cable conduit must accommodate the range of movement allowed to the appliance by the retaining device of the wheeled platform. When moving the assembly (platform plus appliance), never place the mains power lead under tension.

The appliance does not need to be connected in a specific phase sequence or a specific direction of rotation.

6.1.3 Carrying out the electrical installation

Requirements

Check that the following requirement has been met:

- The connection point of the appliance is disconnected from the customer power supply and protective measures taken to ensure the power cannot be switched on again.

Checking the supply ratings and electrical connections

1.	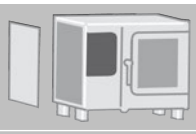	Remove the side panel from the appliance. The circuit diagram and spare parts list are located in the wiring compartment.
2.		Check that the electrical supply ratings on the type plate (see 'Identifying your combi oven' on page 7) match the figures for the building's power supply and those given in the circuit diagram. It is only permitted to connect the appliance if all these values tally with each other.
3.	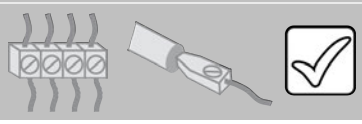	Check all screw connections and terminals on the appliance. The connections may have worked loose during transport.

Carrying out the electrical installation

The figure below shows a size 12.20 combi oven as an example for all appliance sizes:

1.	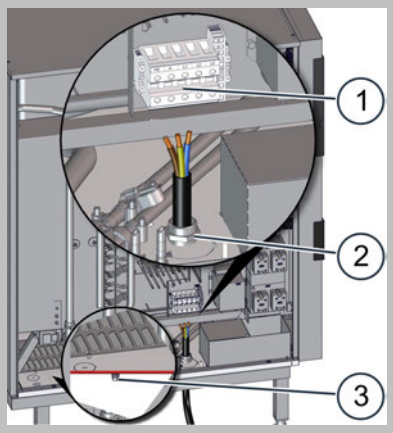	Remove the side panel from the appliance.
2.		Connect the appliance to a potential equalization system at the designated connection point (3).
3.		**Only applicable to table-top units with a wheeled platform:** Pull the mains power lead through the flexible cable conduit.
4.		**Only applicable to table-top units with a wheeled platform:** Fix the flexible cable conduit mechanically in the entry hole (2) for the electrical connection.
5.		Use the mains power cable to connect the power supply to the appliance at the -1X0 terminal block (1).
6.		**Not applicable to table-top units with a wheeled platform:** Make sure that the cable gland (2) is tightened firmly because it also acts as a cable strain relief.
7.		For C4 ES/GS: Reset the safety thermostat for the cooking chamber if necessary. For C4 EB/GB: Reset the safety thermostats for the cooking chamber and boiler if necessary.
8.		Fit the side panel on the appliance and check that it is fixed correctly in place.

6.1.4 Connection to an energy optimization system (electric appliances only)

Purpose of an energy optimization system

You can connect the combi oven to an energy optimization system (e.g. SICOTRONIC). An energy optimization system smooths out peaks in power consumption that occur during operation of your appliances, and can thereby help to reduce your energy costs.

Configuring an energy optimization system

The energy optimization system must be configured as follows:

- The continuous switch-on time for the combi oven must be set to at least 8 minutes to be certain that the target cooking temperature is reached.
- The energy optimization system must not disconnect the power for longer than 30 seconds because the cooking result cannot be guaranteed for a longer interruption in the power supply.

When connecting the system, refer to the circuit diagram and operating instructions of the energy optimization system.

Accessories required

You need the following parts to connect the energy optimization system:

- Connecting cable for energy optimization system
- Cable gland M20
- Cable ties

Connecting an energy optimization system

The figure below shows a size 12.20 combi oven as an example for all appliance sizes:

1.		Disconnect the energy optimization system and the combi oven from the power supply.
2.	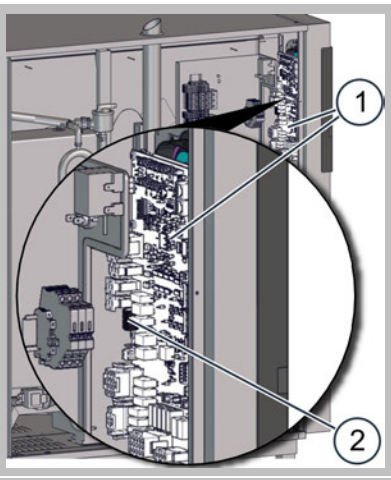	Remove the side panel from the combi oven in order to access terminal block -X37 (2) on the system interface board (SIB) (1) in the area behind the operating panel.
3.	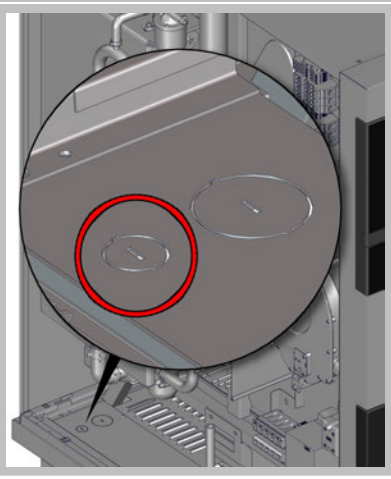	▪ Tap out the smaller, pre-perforated knock-out in the floor panel of the combi oven, at the position indicated. ▪ Insert the cable gland in the knock-out then feed the connecting cable for the energy optimization system through the cable gland into the wiring compartment of the combi oven. ▪ Take the connecting cable to the SIB and fix it in the wiring compartment, for instance using cable ties to attach it to an existing wiring harness.

4.

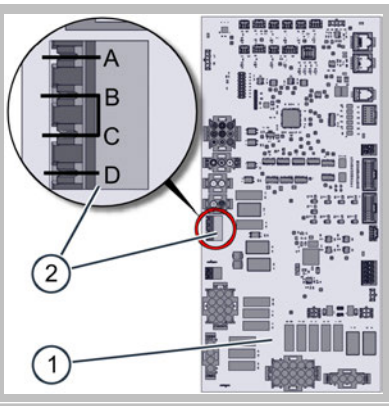

Remove the wire link between the terminals (B) and (C) on terminal block -X37 (2).

5.

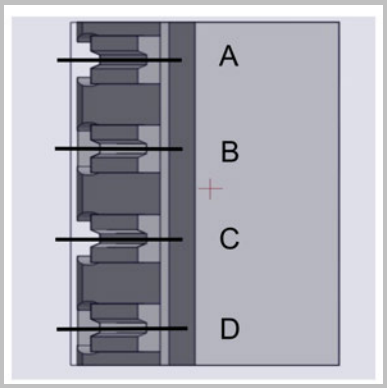

Connect the terminals (A), (B), (C) and (D) of terminal block -X37 (2) to the energy optimization system.

Terminal	Combi oven	Energy optimization system
A	Phase, when combi oven is on	-
B	Phase, when combi oven heating element is on	Switching relay
C	Heater enable, B and C must be connected by switching relay in the energy optimization system in order to enable heating	Switching relay
D	Neutral	-

6.

Refit the side panel on the combi oven.

7.

Put the combi oven and energy optimization system into operation.

6.1.5 Connecting the signal tower

Purpose of a signal tower

A signal tower that is electronically connected to the combi oven indicates the current operating status of your combi oven visually, using three indicator lamps (green, yellow, red), and acoustically. This indicating device provides a signal that can be seen and heard from far away.

Accessories required

The signal tower is supplied with the following original accessories, which you will need in order to connect the signal tower to the combi oven:

- Connecting cable (approx. length 10 m) with M12 female connector
- DN 50 diaphragm grommet

In addition you will need the following equipment:

- Cable ties

Connecting the signal tower

The figure below shows a size 12.20 combi oven as an example for all appliance sizes:

1.		Disconnect the combi oven from the power supply.
2.	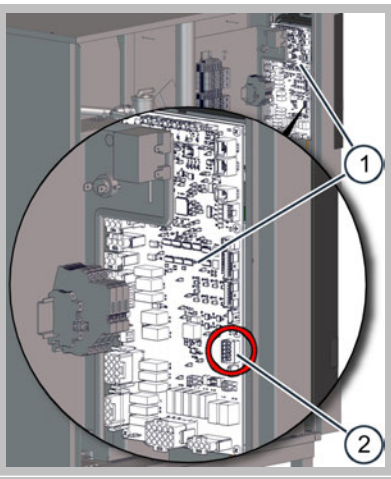	Remove the side panel from the combi oven in order to access terminal block X32 (2) on the system interface board (SIB) (1) in the area behind the operating panel.
3.	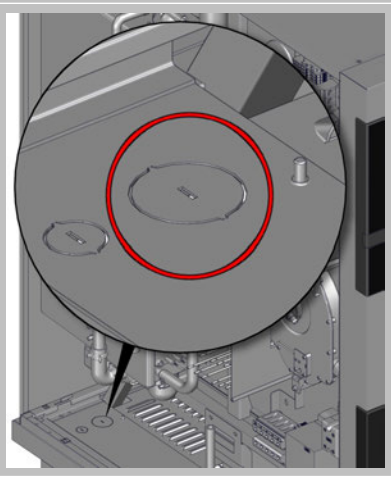	▪ Tap out the larger, pre-perforated knock-out in the floor panel of the combi oven, at the position indicated. ▪ Insert the diaphragm grommet in the knock-out then feed the signal-tower connecting cable through the grommet into the wiring compartment of the combi oven. ▪ Take the connecting cable to the SIB and fix it in the wiring compartment, for instance using cable ties to attach it to an existing wiring harness.

4.

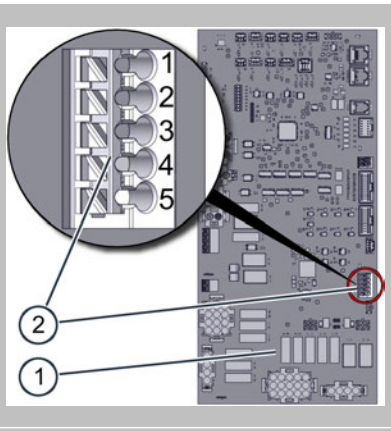

Connect the signal-tower connecting cable to the combi oven in accordance with the PIN assignment shown below.

PIN	Assignment	Wire colour
1	GND	BU (Blue)
2	Signal: buzzer	GY (Grey)
3	Signal: red light	BK (Black)
4	Signal: yellow light	WH (White)
5	Signal: green light	BN (Brown)

5. Refit the side panel on the combi oven.

6. Put the combi oven and signal tower into operation.

6.1.6 Connecting the water-treatment filter monitor

Purpose of the water-treatment filter monitor

You can provide an electrical connection from the combi oven to the remote status indicator of a connected water treatment filter. The combi oven software will then monitor the status of the water treatment filter. A warning message tells you when the filter capacity is down to only 10% so that you know that the water treatment filter will need changing soon.

Accessories required

- 2-core connecting cable (approx. length 2 m); recommended: Ölflex H05VV5-F, 2 x 0.5 mm
- DN 50 diaphragm grommet
- Cable ties

Connecting the water-treatment filter monitor

The figure below shows a size 12.20 combi oven as an example for all appliance sizes:

1.		Disconnect the combi oven from the power supply.
2.		Remove the side panel from the combi oven in order to access terminal block X33 (2) on the system interface board (SIB) (1) in the area behind the operating panel.
3.	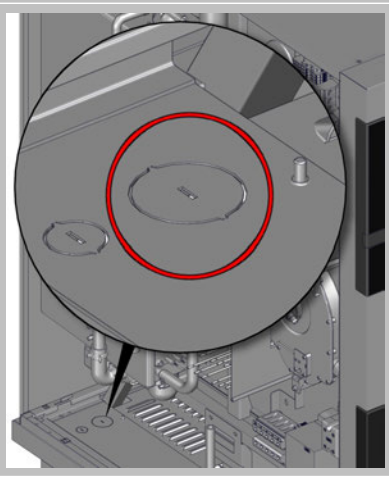	▪ Tap out the larger, pre-perforated knock-out in the floor panel of the combi oven, at the position indicated. ▪ Insert the diaphragm grommet in the knock-out then feed the connecting cable for the water-treatment filter monitor through the grommet into the wiring compartment of the combi oven. ▪ Take the connecting cable to the SIB and fix it in the wiring compartment, for instance using cable ties to attach it to an existing wiring harness.

4.	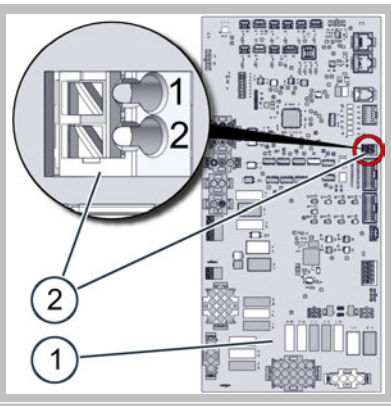	Connect the connecting cable for the water-treatment filter monitor to the combi oven in accordance with the PIN assignment shown below. **PIN** — **Assignment** **1** — Signal **2** — GND
5.		Refit the side panel on the combi oven.
6.		Put the combi oven and water-treatment filter monitor into operation.

6.2 Gas installation

6.2.1 ⚠ Safe working when installing the gas

For your safety

Before starting work, familiarize yourself with the hazards described in 'Hazards and safety precautions during installation' on page 29.

Eligibility of personnel for the gas installation

Connection of the appliance to the gas supply must be performed in accordance with the local statutory regulations and solely by qualified gas fitters with appliance-specific training who have been authorized by the local gas supply company and trained and certified in accordance with applicable national and local regulations.

Personal protective equipment

Wear the personal protective equipment specified in the section 'Personal protective equipment' on page 43 of the 'For your safety' chapter for the relevant tasks.

Regulations for the gas installation

Find out about all national and regional laws and regulations and the regulations from local supply companies and authorities, as well as any other possible requirements which are applicable when installing this gas appliance in the given location Always comply with these regulations without fail.
Follow the building regulations and technical requirements that apply to installing gas appliances at the installation site concerned.
The gas installation must be performed in accordance with the regulations of the gas provider.
The gas fitter must not open any parts sealed by the manufacturer or the manufacturer's authorized agents.
The following regulations apply in Germany to the fixed connection and to the LPG gas connection:

- Technische Regeln Gasinstallation TRGI (German technical regulations for gas installation); equivalent to DVGW Arbeitsblatt G600
- Technische Regeln Flüssiggas TRF (Technical regulations for LPG)
- Druckbehälterverordnung including the TRG (Pressurized container regulation plus technical regulations for pressurized gases)
- DVGW Arbeitsblatt G631 (DVGW worksheet)
- DVGW Arbeitsblatt G21 (DVGW worksheet)
- Unfallverhütungsvorschrift "Verwendung von Flüssiggas" (Accident prevention regulations "Use of LPG" (BGV D34/previously VGB 21))
- Unfallverhütungsvorschrift "Gase" (Accident prevention regulations "Gases" (BGV B6/previously VGB 61))
- Unfallverhütungsvorschrift Arbeiten an Gasleitungen (German accident prevention regulations "Work on gas pipelines" (BGR 500 section 2.31/GUV-R500 section 2.31))
- VDI Directive 2052: Kitchen air conditioning and ventilation systems
- Feuerungsanlagenverordnung (FeuVO, FAV = Combustion equipment regulation) for each of the federal states

On smelling gas

If you smell gas, take the following actions:

- Cut off the gas supply immediately.
- Ventilate the room carefully.
- Do not operate any electrical equipment. Do not create a spark.
- Evacuate the building.
- Notify the gas utility company and if necessary the fire brigade using a phone located outside the hazardous area.

Escaping gas

⚠DANGER

Risk of explosion from escaping gas

Escaping gas can ignite and cause an explosion.

- ▷ Install a gas shut-off device close to the appliance.
- ▷ Make certain that the gas supply is disconnected before starting work on the gas installation.
- ▷ After connecting to the gas supply and any subsequent operation on gas-carrying components, always check for leaks at every connection point and supply point to gas-carrying components. Ensure that all the specified points inside and outside the appliance are gastight before putting the combi oven into service.
- ▷ For table-top units on a wheeled platform with flexible supply pipe, to ensure that the appliance is secured in place, make sure that the retaining device which restricts the range of movement of the platform plus appliance is connected.

6.2.2 Planning the gas installation

⚠ Rules for safe gas installation of the appliances

Observe the following rules to prevent hazards caused by faulty gas connections:

- The combi oven is supplied from the factory for operation with a defined gas type (see appliance type plate). In order to operate the combi oven using different gas types, a qualified member of staff from an authorized service company must first convert the combi oven.
- After connecting to the gas supply and after any subsequent operation on gas-carrying components, always check for leaks at every connection point and supply point to gas-carrying components. Ensure that all the specified points inside and outside the appliance are gastight before putting the combi oven into service.
- For table-top units with a wheeled platform, the gas supply must be provided via a flexible gas supply pipe.
- For table-top units on a wheeled platform, the length of the gas supply pipe must accommodate the range of movement allowed to the appliance by the retaining device of the wheeled platform. When moving the assembly (platform plus appliance), never strain or wheel over the gas supply pipe.

Type of gas appliance

The combi oven is the following type of gas appliance:

Type of gas appliance	Meaning
B23	Open flues dependent on room air ▪ With burner fan upstream of the burner and ▪ Without draft diverter

Gas installation regulations and customer-supplied fittings

The table below shows what equipment must be provided by the customer and what regulations must be observed when connecting the appliance.

Equipment	Regulations
Fixed connection	The appliance is designed to be permanently connected to the customer's gas supply. Position of the gas supply: Point J in the connection drawing. The appliance must be secured in place.
Gas shut-off device	A gas shut-off device must be fitted close to the appliance. The gas shut-off device must be easily accessible, and situated so that it can also be shut off in a hazardous situation.
Pressure regulator	A pressure reducer must be fitted if the supply flow pressure is too high.
All connection components	All connection components provided by the customer must be tested in accordance with local and national regulations.

Providing a guaranteed supply of combustion air

In order to ensure a sufficient supply of combustion air, take specific measures according to the installation situation and power of the combi oven in accordance with local regulations, standards and directives. As the responsible gas fitter, you must ensure there is an adequate supply of combustion air.

Please note the following points:

- The amount of combustion air required depends on the rated gas consumption; see 'Exhaust gas output rate' on page 134.

Providing reliable ventilation

The appliance produces combustion gases that must be vented to the outside air via suitable gas exhaust conduction. It is essential to follow the relevant information in the topic 'Adjacent systems' on page 47.

As the responsible gas fitter, you must ensure that adequate ventilation exists for operation of the combi oven in order to prevent noxious combustion gases reaching harmful concentration levels in the room in which the combi oven is installed.

Exhaust gas temperature

The temperature of the undiluted exhaust gas can reach 500 °C.

Follow fire safety regulations.

6.2.3 Positions of the fan burners and main gas valve

Position of the fan burners in appliances sizes 6.10, 6.20, 10.10, 10.20 and 12.20

The following illustration shows a size 6.10 combi oven with boiler as an example of gas appliances of size 6.10, 6.20, 10.10, 10.20 and 12.20:

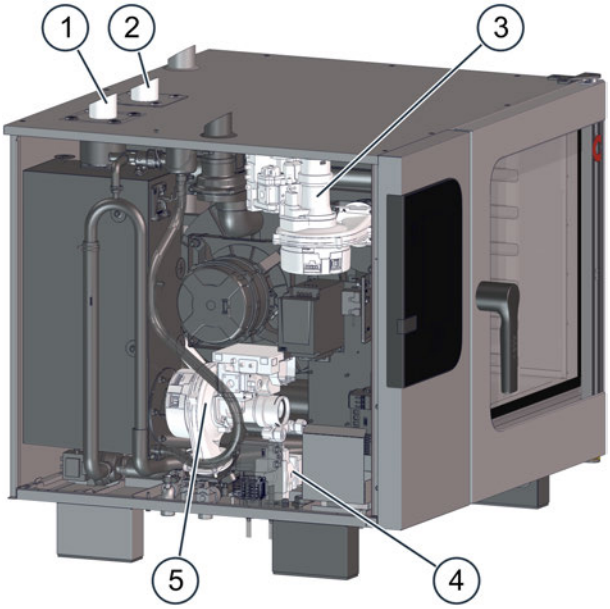

Item	Name
1	Exhaust outlet from boiler burner (only on models with boiler not steam injection)
2	Exhaust outlet for convection burner
3	Convection burner
4	Main gas valve, connection to gas supply in appliance floor
5	Boiler burner (only on models with boiler not steam injection)

Position of the fan burners in appliances sizes 20.10 and 20.20

The following illustration shows a size 20.20 combi oven with boiler as an example of gas appliances of size 20.10 and 20.20:

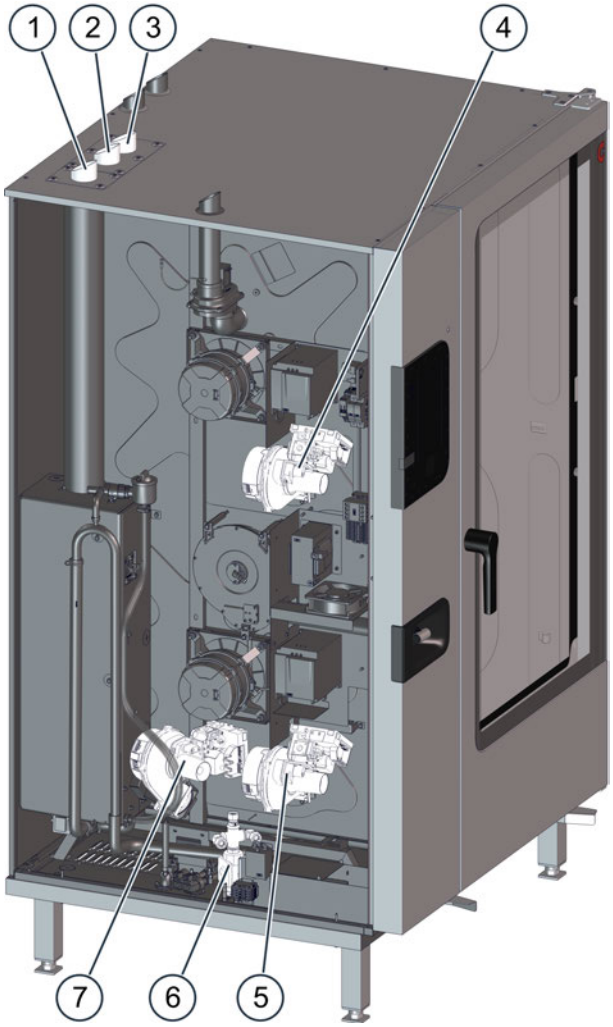

Item	Name
1	Exhaust outlet from boiler burner (only on models with boiler not steam injection)
2	Exhaust outlet for bottom convection burner
3	Exhaust outlet for top convection burner
4	Top convection burner
5	Bottom convection burner
6	Main gas valve, connection to gas supply in appliance floor
7	Boiler burner (only on models with boiler not steam injection)

6.2.4 Installing the gas

Requirements

Check that the following requirement has been met:
- A gas shut-off device is installed at the customer's premises.

Materials required

- Leak detector spray/gas detector

Installing the gas

1.	Compare the type of gas, the gas pressure and the rating for the gas supply connection with the data given on the appliance type plate. The appliance must not be connected to the gas supply or put into use unless the values match those on the type plate.	'Gas specification' on page 132
2.	Connect to the gas supply.	
3.	Make sure that all the connections outside the appliance are gastight.	
4.	Find out about the construction and position of the burner, and the layout of its parts.	'Positions of the fan burners and main gas valve' on page 90
5.	Switch on the appliance.	
6.	Make sure that all the connections outside and inside the appliance are gastight. Seal any connections that are not gastight.	
7.	Start a cooking profile in the Convection operating mode.	
8.	Measure the supply flow pressure at the gas valve. **Result:** ▪ If the supply flow pressure is higher than the specified range, it may be possible to reduce the level. ▪ If the supply flow pressure is lower than the specified range, then you as gas fitter will not be able to correct this. ▪ If the measured value lies within the specified limits, continue from step 9 of these instructions. ▪ If you cannot manage to achieve a supply flow pressure within the limits, shut off the gas supply to the combi oven at the gas shut-off device and discontinue the installation.	Measuring the supply flow pressure on page 93
9.	Measure the CO values for the burner. The appliance must not be put into use unless it complies with the specified limits.	Measuring the exhaust gas values on page 94
10.	Switch off the appliance.	
11.	Notify the following bodies (where necessary) of the installation that has been made: ▪ Gas provider ▪ Relevant authorities in accordance with local statutory regulations and requirements.	

6.2.5 Measuring the supply flow pressure

Requirements

- A gas shut-off device is installed at the customer's premises.
- The gas has been installed correctly in accordance with the instructions under 'Installing the gas' on page 92 as far as the step 'Measuring the supply flow pressure'.

Materials required

- pressure meter

Measuring the supply flow pressure

1.	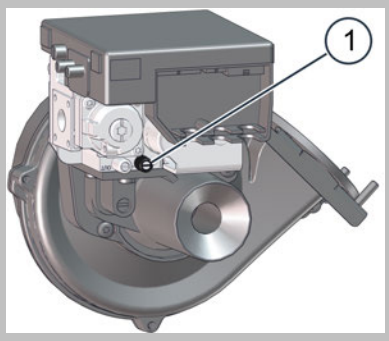	Measure the supply flow pressure at the valve (1) of the gas valve on the fan burner.

2.		Compare the measured value with the specified limits; see 'Gas specification' on page 132.
		Result:
		▪ If the measured supply flow pressure is lower than the specified values:
		  ▪ Notify the gas provider. In this case the appliance must not be put into use and the gas supply must be switched off.
		▪ If the measured supply flow pressure is higher than the specified values:
		  ▪ Reduce the supply flow pressure.

6.2.6 Measuring the exhaust gas values

Materials required

- Exhaust gas analyser

Measuring the exhaust gas values

1.	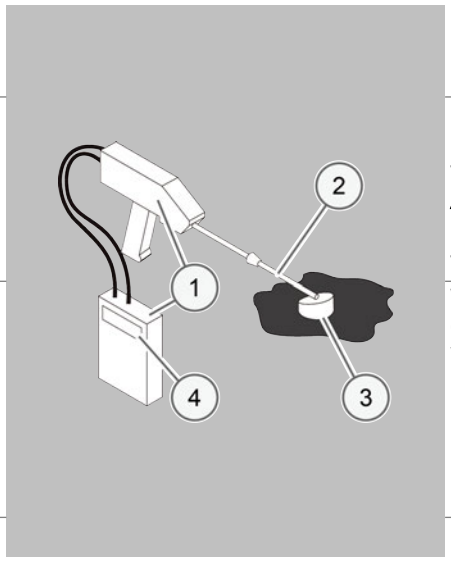	Guide the measuring sensor (2) of the exhaust gas meter (1) into the exhaust outlet (3) for the burner to be measured.
2.		Measure the exhaust gas values. Follow the operating instructions for the meter when taking the readings. **Additional information:** If the meter indicates approx. 21% O_2 or nothing at all, then the sensor is inside the wrong exhaust outlet.
3.		Wait 1 minute before taking the readings (4) and then compare them with the specified limit; see 'Exhaust gas values' under 'Gas specification' on page 132. ▪ If the reading does not lie within the limit, the appliance much be checked as directed in the adjustment instructions in the service documentation. Otherwise: ▪ Continue with Step 4.
4.		Record the measurements.

6.3 Water connection

6.3.1 ⚠ Safe working when connecting the water supply and the drain

For your safety

Before starting work, familiarize yourself with the hazards described in 'Hazards and safety precautions during installation' on page 29.

Eligibility of personnel connecting the water supply and the wastewater system

Only qualified plumbers from an authorized service company are permitted to connect the combi oven to the water supply and to the waste wastewater system.

Personal protective equipment

Wear the personal protective equipment specified in the section 'Personal protective equipment' on page 43 of the 'For your safety' chapter for the relevant tasks.

Regulations for the water connection

Water pipes and connections must comply with local and national regulations. In particular these include:
- DIN 1988 part 2 and part 4
- EN 61770
- EN 1717

For appliances with an NSK certificate, the following regulations must also be observed:
- Regulations from the National Sanitation Foundation (NSF)
- International Plumbing Code 2003
- International Code Council (ICC)
- Uniform Plumbing Code 2003, International Association of Plumbing and Mechanical Officials (IAPMO)

The appliance must be installed with suitable backflow protection to comply with applicable federal, state, and local codes.

For Australia and New Zealand:
The water pipes must be installed in compliance with AS/NZS 3500 Plumbing and Drainage Code.

Australia only:
The double check valve supplied with this appliance must be installed in the water supply line to this appliance to provide the backflow prevention required by the Plumbing Code of Australia.

Regulations for the drain connection

You must comply with local and national regulations on the design of the drain connection and on the composition of the wastewater. These include:
- DIN 1988 part 2 and part 4
- DIN EN 1717
- Local wastewater regulations

For appliances with an NSK certificate, the following regulations must also be observed:
- International Code Council (ICC) or the unified Plumbing Code from the International Association of Plumbing and Mechanical Officials (IAPMO)
- Regulations from the National Sanitation Foundation (NSF)

Drain piping and connections must comply with the International Plumbing Code 2003, International Code Council (ICC) or the Uniform Plumbing Code 2003, International Association of Plumbing and Mechanical Officials (IAPMO).

6.3.2 Water supply

⚠ Rules for safe installation of the water supply

Observe the following rules to prevent hazards caused by a faulty water connection:

- For table-top units with a wheeled platform, the water supply must be provided via a flexible water supply pipe.
- For table-top units on a wheeled platform, the length of the water supply pipe must accommodate the range of movement allowed to the appliance by the retaining device of the wheeled platform. When moving the assembly (platform plus appliance), never strain or wheel over the water supply pipe.

Connecting the water supply

The appliance is designed to be permanently connected to the customer's water supply.

Connecting the water supply with a flexible connecting pipe

The appliance can be connected to the water supply using a flexible DN10 water supply pipe to DIN EN 61770 with a 3/4" screw connection.

Water quality and water hardness

- Find out the water quality and water hardness from your local water supply company, or test the water quality as described in 'Testing the water quality' on page 100.
- Information on the required drinking water quality is given in the 'Technical Data' chapter under the 'Water quality' on page 138 heading.
- If necessary, provide suitable water treatment measures. For instance these may be installing a water filter and/or a water treatment system.
- Test the water quality as described in 'Testing the water quality' on page 100 to ensure that after water treatment, the water meets the specified quality values.

Connection diagram without water treatment

Connection diagram	Connections on table-top units	Connections on floor-standing units
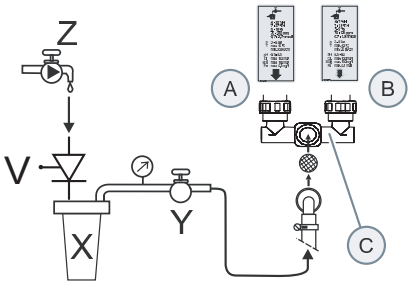	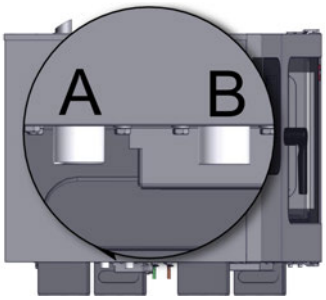	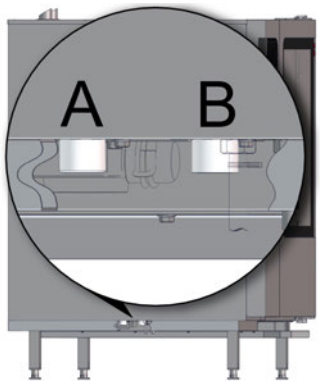
Australia / New Zealand: 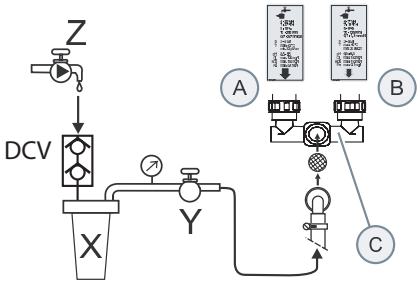		

Item	Name	Explanation
A	Water connection for boiler and water injection	For water quality see 'Water quality' on page 137
B	Water connection for cleaning system and recoil hand shower	For water quality see 'Water quality' on page 137
C	Water distributor	-
Z	Customer water pipe	Water quality: Drinking water
X	0.08 mm sediment filter	A 0.08 mm sediment filter must be installed if the water has a high level of impurity.
Y	Shut-off device	Water tap
V	Suitable backflow preventer (only required for steam injectors where there is an NSF requirement, otherwise optional)	The appliance must be installed with suitable backflow protection to comply with applicable federal, state, and local codes.
DCV	Double check valve	Australian regulations for sanitary installations require this component to be fitted in front of any installed filtration or treatment devices.

Connection diagram with water treatment

Connection diagram	Connections on table-top units	Connections on floor-standing units
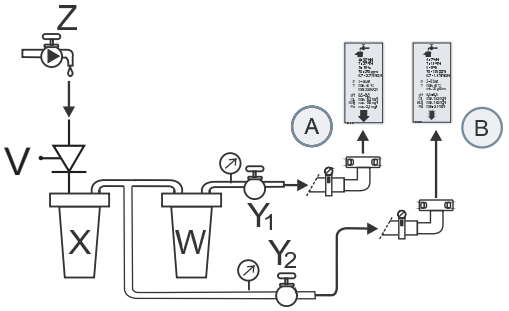	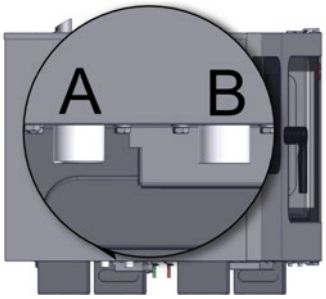	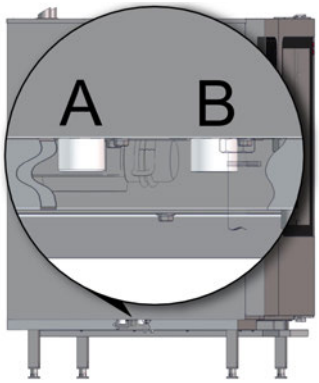
Australia / New Zealand: 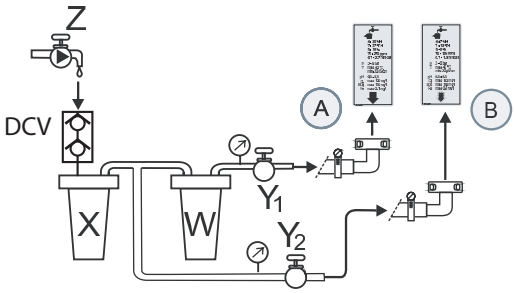		

Item	Name	Explanation
A	Water connection for boiler and water injection	For water quality see 'Water quality' on page 137
B	Water connection for cleaning system and recoil hand shower	For water quality see 'Water quality' on page 137
Z	Customer water pipe	Water quality: Drinking water
X	0.08 mm sediment filter	A 0.08 mm sediment filter must be installed if the water has a high level of impurity.
W	Water treatment for softening the water to the required soft water quality	Recommended: Partial demineralization cartridge
Y	Shut-off device	Water tap
V	Suitable backflow preventer (only required for steam injectors where there is an NSF requirement, otherwise optional)	The appliance must be installed with suitable backflow protection to comply with applicable federal, state, and local codes.
DCV	Double check valve	Australian regulations for sanitary installations require this component to be fitted in front of any installed filtration or treatment devices.

Installing the water supply

1.		Flush through the customer's water supply pipe (Z).
2.		Fit the sediment filter (X) and, if necessary, a water treatment system (W).
3.	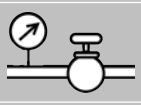	Fit a separate shut-off device (Y) for each appliance.
4.		If a backflow preventer (V) or double check valve (DCV) are required (see connection diagram), fit the relevant device in the water supply line.
5.	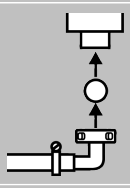	Connect the appliance as shown in the connection drawing.
6.	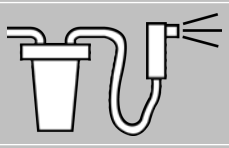	Flush through the sediment filter by operating the recoil hand shower.
7.	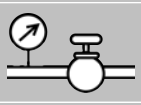	Once the water supply has been installed, close the shut-off device.
8.		Inform the user about the service intervals for the filters, and the water treatment system if applicable.

6.3.3 Test the water quality

Materials required

You will need the following materials:

- 1 sample container for taking samples
- 1 conductivity meter (part no. 3019007)
- Analysis kit for measuring general hardness and carbonate hardness, including two analysis containers (part no. 3019010)
- Protective gloves

Test the water quality

Measure the electrical conductivity and general hardness of the water By following the instructions included with the tester and analysis kit.

Compare the measured values with the recommended values listed under the 'Water quality' heading in the 'Technical data' on page 138 chapter.

6.3.4 Drain connection

⚠ Rules for safe installation of the drain connection

Observe the following rules to prevent hazards caused by a faulty drain connection:

- There must be no restriction or reduction in the cross-section of the drain pipe.
- The slope of the drain pipe must equal min. 3.5% (2°).
- If more than one appliance is connected to one drain pipe, this pipe must be large enough to allow the wastewater to flow out unchecked.
- The appliance must be connected to the drain using a NON-flexible pipe. A fixed connection is recommended; alternatively an open funnel waste trap can be installed. For table-top units with a wheeled platform, the drain pipe in a permanently connected system must be disconnected before the appliance can be moved with the platform.

Connection diagram (table-top units)

The following illustration shows the wastewater connections to a size 6.10 combi oven as an example of all table-top units:

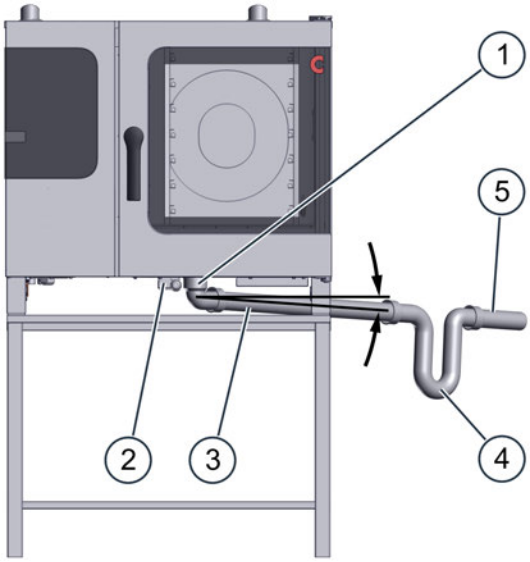

Item	Name	Function
1	Appliance drain	On the appliance floor, connection point C, see 'Connection diagrams' on page 140
2	Safety overflow	▪ On the appliance floor, connection point M, see 'Connection diagrams' on page 140 ▪ Used to drain away water in the event of a fault (blockage).
3	Drain pipe DN 50	▪ Minimum internal diameter = 46 mm ▪ Slope min. 3.5% (2°)
4	Waste trap / Funnel waste trap	Recommended for blocking smells
5	Drain pipe DN 50	▪ Minimum internal diameter = 46 mm ▪ Slope min. 3.5% (2°)

Connection diagram (floor-standing units)

The following illustration shows the wastewater connections to a size 12.20 combi oven as an example of all floor-standing units:

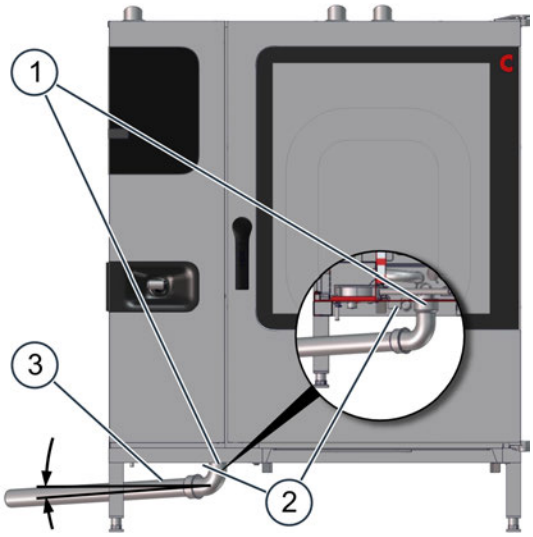

Item	Name	Function
1	Appliance drain	On the appliance floor, connection point C, see 'Connection diagrams' on page 140
2	Safety overflow	▪ On the appliance floor, connection point M, see 'Connection diagrams' on page 140 ▪ Used to drain away water in the event of a fault (blockage).
3	Drain pipe DN 50	▪ Minimum internal diameter = 46 mm ▪ Min. slope min. 3.5% (2°) Drain options: ▪ Fixed connection ▪ Open tank ▪ Gully

Connecting the appliance to the drain

Connect the appliance as shown in the connection diagram. For table-top units, use the flat bend supplied.

6.4 Installing the fully automatic oven cleaning system

6.4.1 ⚠ Safe working during the installation

For your safety

Before starting work, familiarize yourself with the hazards described in 'Hazards and safety precautions during installation' on page 29.

Eligibility of personnel for installing the fully automatic oven cleaning system

Only qualified personnel from an authorized service company are permitted to install and connect the fully automatic oven cleaning system for the appliance.

Personal protective equipment

Wear the personal protective equipment specified in the section 'Personal protective equipment' on page 43 of the 'For your safety' chapter for the relevant tasks.

Contact with cleaning agents

⚠WARNING

Risk of chemical burns or irritation to skin, eyes and respiratory system.

Direct contact with the ConvoClean new (S) cleaning agent or ConvoCare (S) rinse aid will irritate the skin, eyes and respiratory system. Direct contact with the ConvoClean forte (S) cleaning agent will result in chemical burns to the skin, eyes and respiratory organs.

- ▷ Do not inhale the vapours or spray mist from the cleaning agent and rinse aid.
- ▷ Do not let the cleaning agent or rinse aid come into contact with skin, eyes or mucous membranes.
- ▷ Follow the guidance on the cleaning-fluid labels and in the relevant data sheets when using the cleaning agents.
- ▷ Wear personal protective equipment.

6.4.2 Layout of the fully automatic oven cleaning system

Cleaning agent and rinse aid

Use only the cleaning fluids specified here to clean the combi oven.

NOTICE Damage caused as a result of improper use of cleaning agents will invalidate any warranty claims.

The following table shows the approved cleaning agent and rinse aid:

Name	Product	Label color
Cleaning agents	ConvoClean forte / new	red
Rinse aid	ConvoCare	green

Layout of the fully automatic oven cleaning using connected cannisters

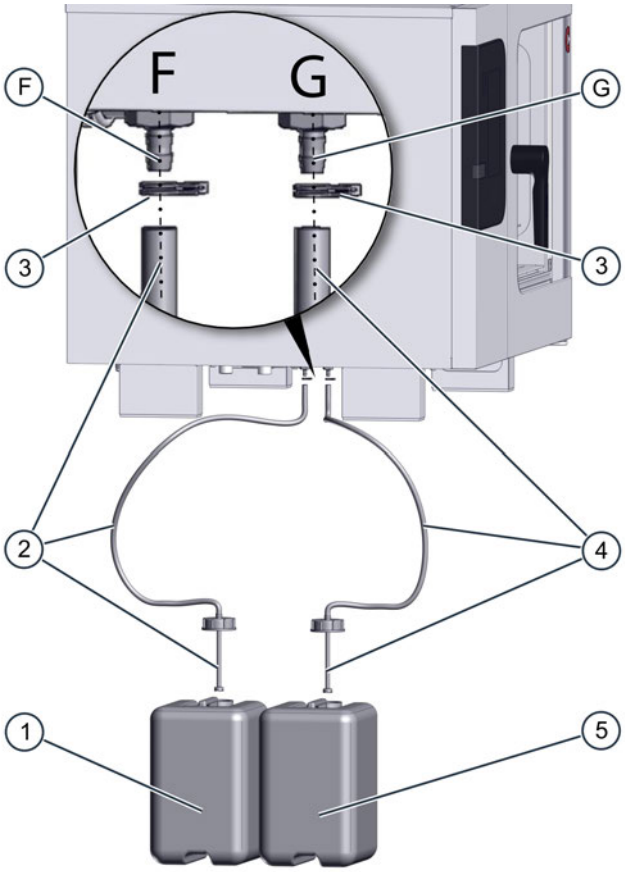

Item	Name	Color coding
1	Canister containing ConvoCare rinse aid (ready-to-use solution in defined mixing ratio)	green (label)
2	Delivery tube for rinse-aid suction nozzle	green (tube)
3	D10 wire clip	-
4	Extractor tube for cleaning agent suction nozzle	red (tube)
5	Canister containing ConvoClean new or ConvoClean forte	red (label)
F	Appliance connector for rinse aid supply	green (lettering)
G	Appliance connector for cleaning agent supply	red (lettering)

Box for cleaning-fluid canisters (optional accessory)

The box for the cleaning-fluid canisters is an optional accessory for the combi oven and is available from the manufacturer.

For table-top units on a stand:

- The box can be suspended from the stand by means of the mounting brackets and the mounting frame. The mounting frame must be fitted by placing it over the studs on the stand. The weight of the combi oven placed on top of the mounting frame, plus the weight of the suspended box and cleaning-fluid canisters, keeps the frame in place.

For floor-standing units or table-top units on a work surface:

- The box can alternatively be screwed to a wall using the holes in the rear wall of the box. The mounting brackets must be removed from the box first before wall-mounting. It is best to fit the box at a nominal distance above the floor to make it easier to clean the kitchen floor. When you fit the box, follow the requirements in 'Installation location for the cleaning agent and rinse aid canisters'.

Installation location for the cleaning-agent and rinse aid canisters

Install the canisters as follows:

- The canisters should be located for easy access beside the appliance on a flat surface.
- The surface on which the canister sits must not lie above the level at which the appliance feet meet the appliance case.
- The surface on which the canister sits must not lie more than 1 metre below this level.

6.4.3 Connecting the fully automatic oven cleaning system

Connecting the fully automatic oven cleaning system to canisters

1.		Mix the supplied ConvoCare Kconcentrate with soft water in the empty ConvoCare rinse aid canister. Follow the instructions in the user manual on mixing the ConvoCare rinse aid in the canister.
2.	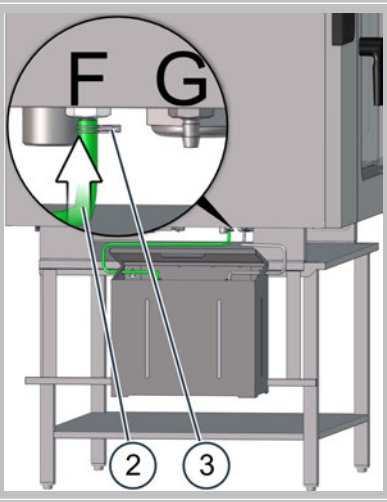	Plug the green extractor tube (2) for the ConvoCare rinse aid onto the connector nipple of the rear tube fitting (F) and secure the tube in place with the wire clip (3) (see label for rinse-aid connection on the left-hand side of the appliance).
3.	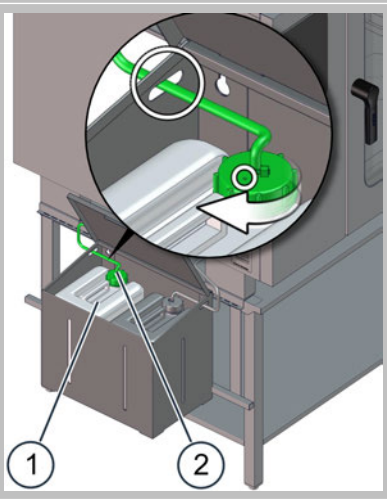	Insert the suction nozzle on the green extractor tube into the rinse-aid canister (1). There must be no kinks in the tube and the vent hole in the canister must be open and unblocked.

4.	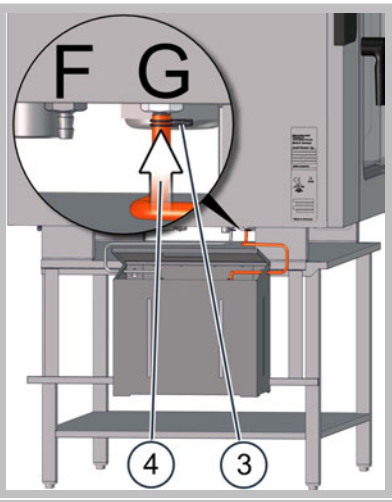	Plug the red extractor tube (4) for the ConvoClean forte or ConvoClean new cleaning agent onto the connector nipple of the front tube fitting (G) and secure the tube in place with the wire clip (3) (see label for cleaning-agent connection on the left-hand side of the appliance).
5.	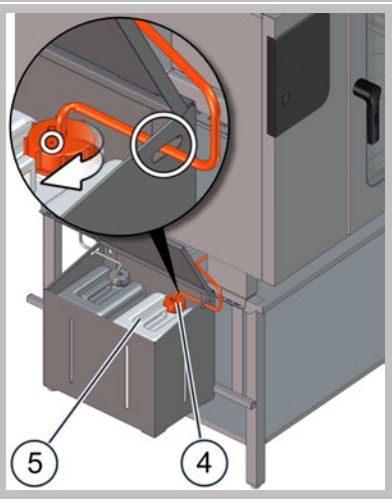	Insert the suction nozzle on the red extractor tube into the cleaning-agent canister (5). There must be no kinks in the tube and the vent hole in the canister must be open and unblocked.

6.5 Installing the grease collecting canister (applies to ConvoGrill only)

6.5.1 ⚠ Safe working during the installation

For your safety

Before starting work, familiarize yourself with the hazards described in 'Hazards and safety precautions during installation' on page 29.

Eligibility of personnel for installing the grease collecting canister

Only qualified personnel from an authorized service company or suitably trained staff are permitted to connect the grease collecting canister for automatic grease removal to the appliance for ConvoGrill.

Personal protective equipment

Wear the personal protective equipment specified in the section 'Personal protective equipment' on page 43 of the 'For your safety' chapter for the relevant tasks.

6.5.2 Connecting the grease collecting canister

Accessories required

The ConvoGrill is supplied with the following original accessories, which you need to use in order to connect the automatic grease removal system. Use solely these original accessories:

- Connecting tube with screw cap for screw-fitting on canister
- Grease collecting canister (empty canister for receiving extracted grease)
- Hose clip for securing the connecting tube on the combi oven.
- Forked bracket for holding the canister screw-cap and connecting tube while the grease collecting canister is being emptied and cleaned.

Connecting the grease collecting canister (ConvoGrill)

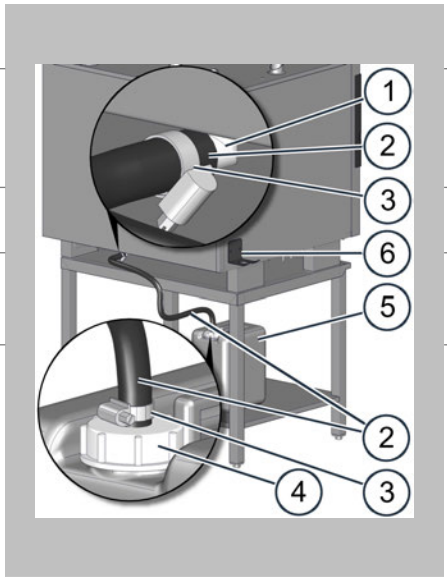

1.	Check the accessories for damage, and only continue with the installation if all the parts are intact and leak-tight.
2.	Plug the bare end of the connecting tube (2) of the automatic grease collecting system onto the outlet pipe (1) at the back underneath the combi oven, and secure the tube (2) with the hose clip (3).
3.	Screw the canister screw-cap (4) attached to the connecting tube (2) onto the grease collecting canister (5).
4.	Place the grease collecting canister (5) in a suitable position and make sure there are no kinks in the connecting tube (2).
5.	Fix the forked bracket (6) within reach of the outlet pipe (1). This bracket will be used to hold the canister screw-cap (4) and connecting tube. To fix in place, use the double-sided adhesive tape on the back of the bracket or the pre-drilled holes in the bracket. **For appliances with a disappearing door:** Do NOT position the bracket (6) on that side of the combi oven alongside which the appliance door slides back.

Installation position for the grease collecting canister

Install the grease collecting canister in accordance with the following requirements:

- The canister must be positioned upright and with easy access beside the appliance on a flat surface.
- The surface on which the canister sits must not lie more than 15 cm above the surface supporting the appliance.
- The user's work area must not be obstructed.

7 Putting into service

Purpose of this chapter

This chapter explains how to prepare your combi oven for use. This chapter is intended for a qualified member of staff from an authorized service company.

7.1 ⚠ Safe working when putting the appliance into service

For your safety when putting the appliance into service

Before starting work, make sure that you are familiar with the hazards described under 'Hazards and safety precautions when putting the appliance into service' on page 31 and in the chapter 'For your safety' in the user manual.

Eligibility of personnel for putting the appliance into service and removing it from service

Work performed on the appliance while putting the appliance into service is performed in special operating circumstances (e.g. with safety covers removed) or includes activities that require personnel to have relevant qualifications and appliance-specific knowledge that exceed the requirements for operating personnel.

The following requirements must be met by personnel:

- They are qualified employees of an authorized service company.
- Personnel have relevant training as a service engineer.
- Personnel have training specific to the appliance.
- In particular, personnel must be able to assess whether the electrical, gas and water supplies and the wastewater system have been connected to the appliance correctly.

Personal protective equipment

Wear the personal protective equipment specified in the section 'Personal protective equipment' on page 43 of the 'For your safety' chapter for the relevant tasks.

On smelling gas

If you smell gas, take the following actions:

- Cut off the gas supply immediately.
- Ventilate the room carefully.
- Do not operate any electrical equipment. Do not create a spark.
- Evacuate the building.
- Notify the gas utility company and if necessary the fire brigade using a phone located outside the hazardous area.

Basic rules for safe operation

If it is known or evident that the combi oven has been moved after installation without authorization (whether intentionally or unintentionally), the appliance must not be put back into service until all the following requirements have been met:

- The appliance and fittings or accessories being used show no signs of damage.
- The installed electrical power cables, water supply pipes and pipes for wastewater and cleaning products show no signs of damage, are fixed securely, are not leaking from any point and appear safe and in working order on visual inspection.
- The 'Requirements relating to the operating condition of the combi oven' on page 22 are met.
- The 'Requirements relating to the operating environment of the combi oven' on page 22 are met.
- All warning signs are in their designated position.

  On gas appliances only:
- A gas service engineer has leak-tested all the gas components in the combi oven and confirmed that all connection and supply points for these gas components, inside and outside the appliance, are gastight.

Rules for safe operation of table-top units

To avoid hazards, the following rules must be observed during operation:

- The air vent and exhaust outlet and the ventilation port on the top of the appliance, and the ventilation holes in the appliance base must not be covered, obstructed or blocked.
- The racks must be attached securely.
- The food containers must be inserted correctly in accordance with the regulations specified in 'Placing the cooking containers in appliances of size X.10 and X.20' in the user manual.
- The suction panel must be locked properly in place.

Additional rules for safe operation of table-top units on a mobile platform

To avoid hazards, the following rules must be observed when operating appliances positioned on a wheeled platform:

- The retaining device for restricting the range of movement of the assembly (platform plus appliance) must be connected at all times.
  Check every day before use that the retaining device is connected.
- The parking brakes on the front wheels must always be engaged when operating the appliances.
- Check that the wheel brakes are on before operation each day.

Rules for safe operation of floor-standing units

To avoid hazards, the following rules must be observed during operation:

- The air vent and exhaust outlet and the ventilation port on the top of the appliance, and the ventilation holes in the appliance base must not be covered, obstructed or blocked.
- The food containers must be inserted correctly in accordance with the regulations specified in 'Placing the cooking containers in appliances of size X.10 and X.20' in the user manual.
- The suction panel must be locked properly in place.

Live parts

⚠DANGER

Risk of electric shock from live parts and loose cables

When the safety cover is open, there is a risk of electric shock from touching live parts.

- ▷ Make sure that any work on the electrical system is performed solely by a qualified electrician from an authorized service company.
- ▷ Before removing the safety covers:
  - Switch off all connections to the power supply.
  - Take protective measures at every power switch to ensure that the power cannot be switched on again.
  - If the appliance has previously been connected to the electricity supply, wait 15 minutes to allow the DC bus capacitors to discharge.
  - Make sure that the appliance is de-energized.
- ▷ Make sure that the electrical connections are intact and connected securely before putting the appliance into service.
- ▷ Before putting the appliance into service, make sure that the appliance, including all metallic accessories, is connected to an equipotential bonding system.

Escaping gas

⚠DANGER

Risk of explosion from escaping gas

Escaping gas can ignite and cause an explosion.

- ▷ Never move the appliance during use
- ▷ For table-top units on a wheeled platform with flexible supply pipe, to ensure that the appliance is secured in place, make sure that the retaining device which restricts the range of movement of the platform plus appliance is connected.

Lack of oxygen

⚠DANGER

Risk of suffocation from lack of breathable air

Inadequate ventilation at the installation location can lead to suffocation while the appliance is running.

- ▷ Check the exhaust gas values and, if necessary, get a certified gas installation engineer from an authorized service company to adjust the burner.
- ▷ Ensure that a ventilation system is in place, is working properly and is running. Moreover, ensure that the ventilation requirements stipulated by the gas installation engineer are met.
- ▷ Do not obstruct lower area of appliance.
- ▷ Only operate the appliance in a draught-free environment

Hot surfaces

⚠WARNING

Risk of burns from high temperatures inside the cooking chamber and on the inside of the appliance door

You may get burnt if you touch any of the interior parts of the cooking chamber, the inside of the appliance door or any parts that are or were inside the oven during cooking mode.

- ▷ Wear personal protective equipment.

Hot steam / vapour

⚠WARNING

Risk of scalding from hot steam and vapour

Escaping hot steam and vapour can cause scalding to face, hands, feet and legs.

- ▷ Always open the appliance door initially only as far as the first latch position for floor-standing units, and only as far as the venting position for table-top units. Wait a moment to let hot steam and vapour escape. Then slowly and carefully, open the appliance door wider.
- ▷ Never put your head inside the cooking chamber.
- ▷ When cooling the cooking chamber using the 'Cool down' function, step back from the appliance to avoid the hot steam and vapour that escape through the open appliance door.

Contact with cleaning agents

⚠WARNING

Risk of chemical burns or irritation to skin, eyes and respiratory system.

Direct contact with the ConvoClean new (S) cleaning agent or ConvoCare (S) rinse aid will irritate the skin, eyes and respiratory system. Direct contact with the ConvoClean forte (S) cleaning agent will result in chemical burns to the skin, eyes and respiratory organs.

- ▷ Do not inhale the vapours or spray mist from the cleaning agent and rinse aid.
- ▷ Do not let the cleaning agent or rinse aid come into contact with skin, eyes or mucous membranes.
- ▷ Do not spray cleaning agent or rinse aid into a cooking chamber that is at a temperature of higher than 60° C, because this will increase the caustic and irritating vapours given off by the cleaning fluid.
- ▷ Do not open the appliance door during fully automatic oven cleaning using connected canisters.
- ▷ During fully automatic oven cleaning using single-measure dispensing, only open the appliance door after being prompted by the software
- ▷ Wear personal protective equipment.

7.2 Procedure for putting the appliance into service

Checks prior to putting the appliance into service

Before putting the combi oven into service, use the checklists to make sure that all requirements are met.

- 'Checklist for moving, setting up and installing the appliance' on page 185
- 'Checklist for safety devices and warnings' on page 187

The appliance must not be put into service until all the specified requirements are met, and

- the appliance and all fittings or accessories show no signs of damage, and
- the cooking chamber is empty except for necessary cooking accessories (for instance food containers).

Preparing the appliance for first-time use

1.		Bring the ambient temperature to the permitted operating temperature.
2.		Switch on the circuit breaker.
3.		Open the water supply.
4.	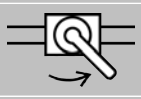	Open the gas supply system (applies to gas appliances).
5.	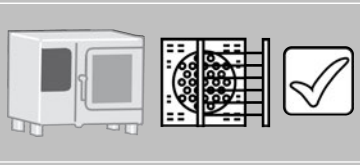	Check that the following are seated properly and in the correct position: ▪ Suction panel ▪ Racks (for table-top units) ▪ Loading trolley (for floor-standing units)
6.	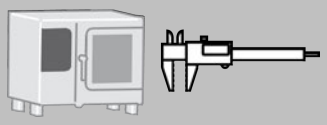	Measure the door gap at the front of the appliance, as specified in 'Measuring appliance gaps' on page 116: If any measured values lie outside the tolerance range, or the top edge of the appliance door is not flush with the top edge of the appliance case, the appliance door must be adjusted. Adjust the gap as described in the servicing documentation or contact the manufacturer.
7.		Switch on the combi oven.
8.	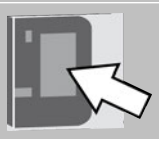	Make the following settings: ▪ Date ▪ Time ▪ Language

Putting the appliance into use

1.		Start the cooking operation using the following cooking data: ▪ 'Combi-steam' operating mode ▪ 150 °C ▪ 10 minutes
2.		Check the following points: ▪ Is the oven light illuminated? ▪ Is the fan running? ▪ Are there any leaks in the water supply and wastewater systems? ▪ Does the temperature rise inside the cooking chamber?
3.	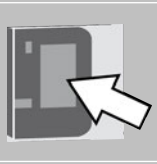	Start the cooking operation using the following cooking data: ▪ 'Steam' operating mode ▪ 100 °C ▪ 10 minutes
4.		Check whether steam is being generated in the cooking chamber (Open the appliance door carefully).
5.	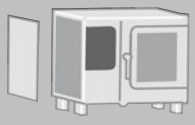	Only for Convotherm 4 injection appliances: Use the pressure regulator to adjust the pressure to give the correct reading at the pressure gauge in the steam generation water supply: ▪ Table-top units: [kPa] 100 (1 bar) ▪ Floor-standing units: [kPa] 150 (1.5 bar)
6.	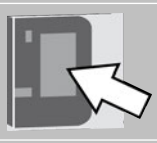	Start fully automatic oven cleaning using the cleaning profile for light soiling.
7.	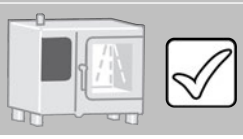	Check that the cleaning process runs without an error message.

Customer guidance and instruction.

Instruct the user regarding all safety-related functions and devices, see 'Checklist: customer guidance and instruction' on page 188. Instruct the user in how to operate the appliance.

7.3 Measuring appliance gaps

Measuring appliance gaps

The figure shows a size 12.20 combi oven as an example for all appliance sizes.
The measured widths of the appliance gaps must lie within the following tolerance ranges:

Illustration	Name	Measurement condition	Tolerance range	
			Table-top units	Floor-standing units
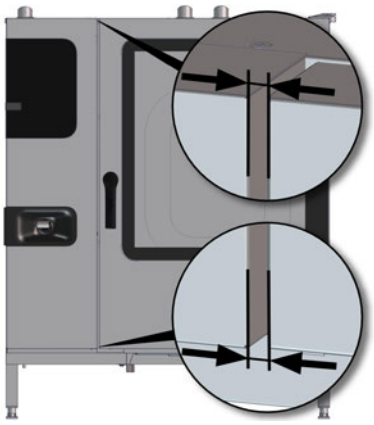	Door gap at the front of the appliance	The appliance door is closed.	12 ± 1 mm	10 ± 1 mm

8 Removal from service and disposal

Purpose of this chapter

This chapter explains how to take your combi oven out of operation and how to dispose of it properly. This chapter is intended for a qualified member of staff from an authorized service company.

8.1 ⚠ Safe working when removing the appliance from service

For your safety when removing the appliance from service

Before starting work, familiarize yourself with the hazards described in 'Hazards and safety precautions when taking the appliance out of service' on page 34.

Eligibility of personnel for removing the appliance from service

Work performed on the appliance while removing it from service is performed in special operating circumstances (e.g. with safety covers removed) or includes activities that require personnel to have relevant qualifications and appliance-specific knowledge that exceed the requirements for operating personnel.

The following requirements must be met by personnel:

- They are qualified employees of an authorized service company.
- Personnel have relevant training as a service engineer.
- Personnel have training specific to the appliance.
- In particular, personnel must be able to assess whether the electrical, gas and water supplies and the wastewater system have been connected to the appliance correctly.

Work on the gas installation must be performed solely by qualified gas fitters with appliance-specific training who have been authorized by the local gas supply company.

Personal protective equipment

Wear the personal protective equipment specified in the section 'Personal protective equipment' on page 43 of the 'For your safety' chapter for the relevant tasks.

On smelling gas

If you smell gas, take the following actions:

- Cut off the gas supply immediately.
- Ventilate the room carefully.
- Do not operate any electrical equipment. Do not create a spark.
- Evacuate the building.
- Notify the gas utility company and if necessary the fire brigade using a phone located outside the hazardous area.

Rules for safe and responsible working when removing the appliance from service

Avoid any risks to yourself and others by following the rules below:

- The kitchen floor must always be kept dry to reduce the risk of accidents.
- The appliance door to the combi oven must be closed and the door handle removed before disposing of the appliance.
- The cleaning agents must be disposed of in accordance with the instructions on the canisters in order to avoid damage to the environment.

Live parts

⚠DANGER

Risk of electric shock from live parts and loose cables

When the safety cover is open, there is a risk of electric shock from touching live parts.

- ▷ Make sure that any work on the electrical system is performed solely by a qualified electrician from an authorized service company.
- ▷ Before removing the safety covers:
  - Switch off all connections to the power supply.
  - Take protective measures at every power switch to ensure that the power cannot be switched on again.
  - Wait 15 minutes to allow the DC bus capacitors to discharge.
  - Make sure that the appliance is de-energized.

Escaping gas

⚠DANGER

Risk of explosion from escaping gas

Escaping gas can ignite and cause an explosion.

- ▷ Make certain that the gas supply is disconnected before starting work on the gas installation.

Moving heavy loads

⚠WARNING

Risk of injury from lifting incorrectly

When lifting the appliance, the weight of the appliance may lead to injuries, especially in the area of the torso.

- ▷ Use a fork-lift truck/pallet truck to move the appliance.
- ▷ When lifting the appliance, use enough people for the weight of the appliance (guide value: 15 to 55 kg max., depending on age and gender). Observe the local occupational safety regulations.
- ▷ Wear personal protective equipment.

Unsuitable supporting surface

⚠WARNING

Risk of crushing if the appliance tips over or falls off

Body parts can be crushed if the appliance tips over or falls off.

- ▷ Make sure that the appliance is never placed on an unsuitable supporting surface.

Contact with cleaning agents

⚠WARNING

Risk of chemical burns or irritation to skin, eyes and respiratory system.

Direct contact with the ConvoClean new (S) cleaning agent or ConvoCare (S) rinse aid will irritate the skin, eyes and respiratory system. Direct contact with the ConvoClean forte (S) cleaning agent will result in chemical burns to the skin, eyes and respiratory organs.

- ▷ Do not inhale the vapours or spray mist from the cleaning agent and rinse aid.
- ▷ Do not let the cleaning agent or rinse aid come into contact with skin, eyes or mucous membranes.
- ▷ Follow the guidance on the cleaning-fluid labels and in the relevant data sheets when using the cleaning agents.
- ▷ Wear personal protective equipment.

8.2 Removal from service and disposal

Requirements

Before removing the appliance from service, check the following points:
- The appliance is de-energized.
- The gas supply system is shut off.
- The water supply is shut off.

Removal from service

To remove your appliance from service, follow the steps for setting up and installing your appliance in the reverse order (see the chapters 'Installation' on page 76, 'Moving the appliance' on page 44 and 'Setting up the appliance' on page 46).

Do not move the appliance until you have disconnected all the connections.

The following tasks must be performed correctly to remove the appliance from service:
- Disconnecting the water connection from the appliance
- Removing the drain connection from the appliance
- Disconnecting or isolating the electrical supply
- Disconnecting the gas supply from the appliance
- Disconnecting the exhaust gas extraction system
- Removing the door catch
- Disconnecting the cleaning agent and rinse aid connections
- Correct disposal of the cleaning fluids in accordance with the EC safety datasheets and as instructed on the cleaning agent containers
- Removing the grease collecting canister
- Professional disposal of extracted waste grease in accordance with national laws and the regulations of local disposal companies and authorities

Disposal

The appliance must not be disposed of with the household refuse, as bulk waste or in contravention of regulations.

Contact the manufacturer for guidance on the environmentally safe disposal of your appliance. The manufacturer is certified to the ISO 14001:2004 environmental management standard and will dispose of your old appliance in accordance with valid environmental protection regulations.

9 Technical data

Purpose of this chapter

This chapter contains the technical data for your combi oven.

Contents

This chapter contains the following topics:

	Page
Dimensions and weights	121
Maximum permissible loading weight	123
Electrical supply	124
Gas specification, natural gas 2H (E), natural gas 2L (LL), propane 3P, liquefied gas 3B/P	132
Gas specification, natural gas (AUS/NZL), propane (AUS/NZL)	132
Gas specification, natural gas (JPN), propane (JPN)	133
Gas specification, natural gas 13A (KOR), propane (KOR)	133
Gas consumption	134
Exhaust gas output rate	134
Heat output	135
Dissipated heat	136
Water connection	136
Water quality	137
Boiler	138
Water consumption, cooking	138
Water consumption, cooking and cleaning	139

9.1 Dimensions and weights

Dimensions, Convotherm 4 EB/ES

		6.10	6.20	10.10	10.20	12.20	20.10	20.20
Appliance **including** packaging								
Width	[mm]	1100	1345	1100	1345	1410	1165	1410
Height	[mm]	1010	1010	1280	1280	1615	2150	2150
Depth	[mm]	940	1140	940	1140	1170	970	1170
Appliance **excluding** packaging								
Width for appliance with right-hinged appliance door	[mm]	875	1120	875	1120	1135	890	1135
Width for appliances with disappearing door inclusive of guide fixing bracket	[mm]	966	1211	966	1211	1247	1002	1247
Height	[mm]	786	786	1058	1058	1406	1942	1942
Depth with appliance door closed	[mm]	792	992	792	992	1020	820	1020
Safety clearances								
Rear	[mm]	50	50	50	50	50	50	50
Right, for appliance with right-hinged appliance door	[mm]	50	50	50	50	50	50	50
Right, for appliances with disappearing door	[mm]	50	50	50	50	50	50	50
Left (larger gap recommended for servicing)	[mm]	50	50	50	50	50	50	50
Top (for ventilation)	[mm]	500	500	500	500	500	500	500

Dimensions, Convotherm 4 GB/GS

		6.10	6.20	10.10	10.20	12.20	20.10	20.20
Appliance **including** packaging								
Width	[mm]	1100	1345	1100	1345	1410	1165	1410
Height	[mm]	1010	1010	1280	1280	1615	2150	2150
Depth	[mm]	940	1140	940	1140	1170	970	1170
Appliance **excluding** packaging								
Width for appliance with right-hinged appliance door	[mm]	875	1120	875	1120	1135	890	1135
Width for appliances with disappearing door inclusive of guide fixing bracket	[mm]	966	1211	966	1211	1247	1002	1247
Height	[mm]	786	786	1058	1058	1406	1942	1942
Depth with appliance door closed	[mm]	792	992	792	992	1020	820	1020
Safety clearances								
Rear	[mm]	50	50	50	50	50	50	50
Right, for appliance with right-hinged appliance door	[mm]	50	50	50	50	50	50	50
Right, for appliances with disappearing door	[mm]	50	50	50	50	50	50	50
Left (larger gap recommended for servicing)	[mm]	50	50	50	50	50	50	50
Top (for ventilation)	[mm]	1000	1000	1000	1000	1000	1000	1000

Weights, Convotherm 4 EB

		6.10	6.20	10.10	10.20	12.20	20.10	20.20
Weight excluding packaging								
excluding ConvoClean / ConvoClean+, excluding ConvoSmoker								
- Right-hinged door	[kg]	115	140	128	184	250	265	349
- Disappearing door	[kg]	122	147	135	192	262	279	364
including ConvoClean / ConvoClean+, excluding ConvoSmoker								
- Right-hinged door	[kg]	121	146	134	190	256	272	356
- Disappearing door	[kg]	128	153	141	198	268	286	371
including ConvoClean / ConvoClean+, including ConvoSmoker								
- Right-hinged door	[kg]	126	151	139	195	-	-	-
- Disappearing door	[kg]	133	158	146	203	-	-	-
Weight of packaging								
Weight of packaging	[kg]	25	35	28	38	45	40	48

Weights, Convotherm 4 ES

		6.10	6.20	10.10	10.20	12.20	20.10	20.20
Weight excluding packaging								
excluding ConvoClean / ConvoClean+, excluding ConvoSmoker								
- Right-hinged door	[kg]	105	135	123	169	235	250	331
- Disappearing door	[kg]	112	142	130	177	247	264	346
including ConvoClean / ConvoClean+, excluding ConvoSmoker								
- Right-hinged door	[kg]	111	141	129	175	241	257	338
- Disappearing door	[kg]	118	148	136	183	253	271	353
including ConvoClean / ConvoClean+, including ConvoSmoker								
- Right-hinged door	[kg]	116	146	134	180	-	-	-
- Disappearing door	[kg]	123	153	141	188	-	-	-
Weight of packaging								
Weight of packaging	[kg]	25	35	28	38	45	40	48

Weights, Convotherm 4 GB

		6.10	6.20	10.10	10.20	12.20	20.10	20.20
Weight excluding packaging								
excluding ConvoClean / ConvoClean+, excluding ConvoSmoker								
- Right-hinged door	[kg]	125	147	136	193	287	281	370
- Disappearing door	[kg]	132	154	143	201	299	295	385
including ConvoClean / ConvoClean+, excluding ConvoSmoker								
- Right-hinged door	[kg]	131	153	142	199	293	288	377
- Disappearing door	[kg]	138	160	149	207	305	302	392
including ConvoClean / ConvoClean+, including ConvoSmoker								
- Right-hinged door	[kg]	136	158	147	204	-	-	-
- Disappearing door	[kg]	143	165	154	212	-	-	-
Weight of packaging								
Weight of packaging	[kg]	25	35	28	38	45	40	48

Weights, Convotherm 4 GS

		6.10	6.20	10.10	10.20	12.20	20.10	20.20
Weight excluding packaging								
excluding ConvoClean / ConvoClean+, excluding ConvoSmoker								
- Right-hinged door	[kg]	115	140	130	178	267	264	352
- Disappearing door	[kg]	122	147	137	186	279	278	367
including ConvoClean / ConvoClean+, excluding ConvoSmoker								
- Right-hinged door	[kg]	121	146	136	184	273	271	359
- Disappearing door	[kg]	128	153	143	192	285	285	374
including ConvoClean / ConvoClean+, including ConvoSmoker								
- Right-hinged door	[kg]	126	151	141	189	-	-	-
- Disappearing door	[kg]	133	158	148	197	-	-	-
Weight of packaging								
Weight of packaging	[kg]	25	35	28	38	45	40	48

9.2 Maximum permissible loading weight

Convotherm 4 EB/ES/GB/GS

The total weight of items placed on the shelf levels must not exceed the maximum permissible loading weight of the combi oven:

		6.10	6.20	10.10	10.20	12.20	20.10	20.20
Maximum load								
Per combi oven	[kg]	30	60	50	100	120	100	180
Per shelf	[kg]	15	15	15	15	15	15	15

9.3 Electrical supply

Convotherm 4 EB (single-phase FC)

		6.10	6.20	10.10	10.20	12.20	20.10	20.20
3N~ 400V 50/60Hz (3/N/PE)								
Rated power consumption	[kW]	11.0	19.5	19.5	33.7	33.7	38.9	67.3
Convection power	[kW]	10.6	19.1	19.1	33.3	33.3	38.1	66.5
Steam power	[kW]	9.1	18.1	18.1	27.2	31.6	31.6	40.2
Motor power	[kW]	0.35	0.35	0.35	0.35	0.35	0.7	0.7
Rated current	[A]	15.9	28.1	28.1	48.7	48.7	56.2	97.3
Fuse rating	[A]	16	32	32	50	50	63	100
Recommended conductor cross-section for wires laid uncovered in air up to 5 m in length.	[mm^2]	5G4	5G6	5G6	5G16	5G16	5G16	5G35
Recommended residual-current device	Type	A	A	A	A	A	A	A
Optional residual-current device	Type	B/F	B/F	B/F	B/F	B/F	B/F	B/F
3~ 230 V 50/60Hz (3/PE)								
Rated power consumption	[kW]	10.9	19.3	19.3	33.4	33.4	38.2	66.4
Convection power	[kW]	10.5	18.9	18.9	33.0	33.0	37.8	66.0
Steam power	[kW]	9.0	18.0	18.0	27.0	31.3	31.3	39.9
Motor power	[kW]	0.35	0.35	0.35	0.35	0.35	0.7	0.7
Rated current	[A]	27.4	48.5	48.5	84.0	84.0	96.0	166.9
Fuse rating	[A]	35	50	50	100	100	100	200
Recommended conductor cross-section for wires laid uncovered in air up to 5 m in length.	[mm^2]	4G6	4G16	4G16	4G35	4G35	4G35	4G70
Recommended residual-current device	Type	A	A	A	A	A	A	A
Optional residual-current device	Type	B/F	B/F	B/F	B/F	B/F	B/F	B/F
3~ 200 V 50/60Hz (3/PE)								
Rated power consumption	[kW]	10.9	19.3	19.3	33.4	33.4	38.2	66.4
Convection power	[kW]	10.5	18.9	18.9	33.0	33.0	37.8	66.0
Steam power	[kW]	9.0	18.0	18.0	27.0	31.3	31.3	39.9
Motor power	[kW]	0.35	0.35	0.35	0.35	0.35	0.7	0.7
Rated current	[A]	31.5	55.8	55.8	96.6	96.6	110.4	191.9
Fuse rating	[A]	35	63	63	100	100	125	200
Recommended conductor cross-section for wires laid uncovered in air up to 5 m in length.	[mm^2]	4G6	4G16	4G16	4G35	4G35	4G50	4G95
Recommended residual-current device	Type	A	A	A	A	A	A	A
Optional residual-current device	Type	B/F	B/F	B/F	B/F	B/F	B/F	B/F

Convotherm 4 EB (three-phase FC)

		6.10	6.20	10.10	10.20	12.20	20.10	20.20
3~ 400 V 50/60Hz								
Rated power consumption	[kW]	11.0	19.5	19.5	33.7	33.7	38.9	67.3
Convection power	[kW]	10.6	19.1	19.1	33.3	33.3	38.1	66.5
Steam power	[kW]	9.1	18.1	18.1	27.2	31.6	31.6	40.2
Motor power	[kW]	0.35	0.35	0.35	0.35	0.35	0.7	0.7
Rated current	[A]	15.9	28.1	28.1	48.7	48.7	56.2	97.3
Fuse rating	[A]	16	35	35	50	50	63	100
Recommended conductor cross-section for wires laid uncovered in air up to 5 m in length.	[mm^2]	5G4	5G6	5G6	5G16	5G16	5G16	5G35
Recommended residual-current device	Type	B/F	B/F	B/F	B/F	B/F	B/F	B/F
3~ 440 V 60 Hz								
Rated power consumption	[kW]	9.2	16.3	16.3	28.2	28.2	32.6	56.3
Convection power	[kW]	8.8	15.9	15.9	27.8	27.8	31.8	55.5
Steam power	[kW]	7.6	15.1	15.1	22.7	26.3	26.3	33.6
Motor power	[kW]	0.35	0.35	0.35	0.35	0.35	0.7	0.7
Rated current	[A]	12.1	21.4	21.4	37.0	37.0	42.8	73.9
Fuse rating	[A]	16	25	25	50	50	50	100
Recommended conductor cross-section for wires laid uncovered in air up to 5 m in length.	[mm^2]	4G4	4G6	4G6	4G16	4G16	4G16	4G35
Recommended residual-current device	Type	B/F	B/F	B/F	B/F	B/F	B/F	B/F
3~ 480 V 60 Hz								
Rated power consumption	[kW]	10.9	19.3	19.3	33.4	33.4	38.6	66.8
Convection power	[kW]	10.5	18.9	18.9	33.0	33.0	37.8	66.1
Steam power	[kW]	9.0	18.0	18.0	27.0	31.3	31.3	39.9
Motor power	[kW]	0.35	0.35	0.35	0.35	0.35	0.7	0.7
Rated current	[A]	13.1	23.3	23.3	40.3	40.3	46.5	80.5
Fuse rating	[A]	16	25	25	50	50	50	100
Recommended conductor cross-section for wires laid uncovered in air up to 5 m in length.	[mm^2]	4G4	4G6	4G6	4G16	4G16	4G16	4G35
Recommended residual-current device	Type	B/F	B/F	B/F	B/F	B/F	B/F	B/F

Convotherm 4 ES (single-phase FC)

		6.10	6.20	10.10	10.20	12.20	20.10	20.20
3N~ 400V 50/60Hz (3/N/PE)								
Rated power consumption	[kW]	11.0	19.5	19.5	33.7	33.7	38.9	67.3
Convection power	[kW]	10.6	19.1	19.1	33.3	33.3	38.1	66.5
Motor power	[kW]	0.35	0.35	0.35	0.35	0.35	0.7	0.7
Rated current	[A]	15.9	28.1	28.1	48.7	48.7	56.2	97.3
Fuse rating	[A]	16	32	32	50	50	63	100
Recommended conductor cross-section for wires laid uncovered in air up to 5 m in length.	[mm^2]	5G4	5G6	5G6	5G16	5G16	5G16	5G35
Recommended residual-current device	Type	A	A	A	A	A	A	A
Optional residual-current device	Type	B/F	B/F	B/F	B/F	B/F	B/F	B/F
3~ 230 V 50/60Hz (3/PE)								
Rated power consumption	[kW]	10.9	19.3	19.3	33.4	33.4	38.2	66.4
Convection power	[kW]	10.5	18.9	18.9	33.0	33.0	37.8	66.0
Motor power	[kW]	0.35	0.35	0.35	0.35	0.35	0.7	0.7
Rated current	[A]	27.4	48.5	48.5	84.0	84.0	96.0	166.9
Fuse rating	[A]	35	50	50	100	100	100	200
Recommended conductor cross-section for wires laid uncovered in air up to 5 m in length.	[mm^2]	4G6	4G16	4G16	4G35	4G35	4G35	4G70
Recommended residual-current device	Type	A	A	A	A	A	A	A
Optional residual-current device	Type	B/F	B/F	B/F	B/F	B/F	B/F	B/F
3~ 200 V 50/60Hz (3/PE)								
Rated power consumption	[kW]	10.9	19.3	19.3	33.4	33.4	38.2	66.4
Convection power	[kW]	10.5	18.9	18.9	33.0	33.0	37.8	66.0
Motor power	[kW]	0.35	0.35	0.35	0.35	0.35	0.7	0.7
Rated current	[A]	31.5	55.8	55.8	96.6	96.6	110.4	191.9
Fuse rating	[A]	35	63	63	100	100	125	200
Recommended conductor cross-section for wires laid uncovered in air up to 5 m in length.	[mm^2]	4G6	4G16	4G16	4G35	4G35	4G50	4G95
Recommended residual-current device	Type	A	A	A	A	A	A	A
Optional residual-current device	Type	B/F	B/F	B/F	B/F	B/F	B/F	B/F

Convotherm 4 ES (three-phase FC)

		6.10	6.20	10.10	10.20	12.20	20.10	20.20
3~ 400 V 50/60Hz								
Rated power consumption	[kW]	11.0	19.5	19.5	33.7	33.7	38.9	67.3
Convection power	[kW]	10.6	19.1	19.1	33.3	33.3	38.1	66.5
Motor power	[kW]	0.35	0.35	0.35	0.35	0.35	0.7	0.7
Rated current	[A]	15.9	28.1	28.1	48.7	48.7	56.2	97.3
Fuse rating	[A]	16	35	35	50	50	63	100
Recommended conductor cross-section for wires laid uncovered in air up to 5 m in length.	[mm^2]	5G4	5G6	5G6	5G16	5G16	5G16	5G35
Recommended residual-current device	Type	B/F	B/F	B/F	B/F	B/F	B/F	B/F
3~ 440 V 60 Hz								
Rated power consumption	[kW]	9.2	16.3	16.3	28.2	28.2	32.6	56.3
Convection power	[kW]	8.8	15.9	15.9	27.8	27.8	31.8	55.5
Motor power	[kW]	0.35	0.35	0.35	0.35	0.35	0.7	0.7
Rated current	[A]	12.1	21.4	21.4	37.0	37.0	42.8	73.9
Fuse rating	[A]	16	25	25	50	50	50	100
Recommended conductor cross-section for wires laid uncovered in air up to 5 m in length.	[mm^2]	4G4	4G6	4G6	4G16	4G16	4G16	4G35
Recommended residual-current device	Type	B/F	B/F	B/F	B/F	B/F	B/F	B/F
3~ 480 V 60 Hz								
Rated power consumption	[kW]	10.9	19.3	19.3	33.4	33.4	38.6	66.8
Convection power	[kW]	10.5	18.9	18.9	33.0	33.0	37.8	66.1
Motor power	[kW]	0.35	0.35	0.35	0.35	0.35	0.7	0.7
Rated current	[A]	13.1	23.3	23.3	40.3	40.3	46.5	80.5
Fuse rating	[A]	16	25	25	50	50	50	100
Recommended conductor cross-section for wires laid uncovered in air up to 5 m in length.	[mm^2]	4G4	4G6	4G6	4G16	4G16	4G16	4G35
Recommended residual-current device	Type	B/F	B/F	B/F	B/F	B/F	B/F	B/F

Convotherm 4 GB

		6.10	6.20	10.10	10.20	12.20	20.10	20.20
1N~ 100V 50/60Hz								
Rated power consumption	[kW]	0.6	0.6	0.6	0.6	0.6	1.1	1.1
Convection power	[kW]	0.1	0.1	0.1	0.1	0.1	0.2	0.2
Steam power	[kW]	0.1	0.1	0.1	0.1	0.1	0.1	0.1
Motor power	[kW]	0.35	0.35	0.35	0.35	0.35	0.7	0.7
Rated current	[A]	6.3	6.3	6.3	6.3	6.3	10.9	10.9
Fuse rating	[A]	16	16	16	16	16	16	16
Recommended conductor cross-section for wires laid uncovered in air up to 5 m in length.	[mm^2]	3G2.5	3G2.5	3G2.5	3G2.5	3G2.5	3G2.5	3G2.5
Recommended residual-current device	Type	A	A	A	A	A	A	A
Optional residual-current device	Type	B/F	B/F	B/F	B/F	B/F	B/F	B/F
1N~ 230V 50/60Hz								
Rated power consumption	[kW]	0.6	0.6	0.6	0.6	0.6	1.1	1.1
Convection power	[kW]	0.1	0.1	0.1	0.1	0.1	0.2	0.2
Steam power	[kW]	0.1	0.1	0.1	0.1	0.1	0.1	0.1
Motor power	[kW]	0.35	0.35	0.35	0.35	0.35	0.7	0.7
Rated current	[A]	2.7	2.7	2.7	2.7	2.7	4.7	4.7
Fuse rating	[A]	16	16	16	16	16	16	16
Recommended conductor cross-section for wires laid uncovered in air up to 5 m in length.	[mm^2]	3G2.5	3G2.5	3G2.5	3G2.5	3G2.5	3G2.5	3G2.5
Recommended residual-current device	Type	A	A	A	A	A	A	A
Optional residual-current device	Type	B/F	B/F	B/F	B/F	B/F	B/F	B/F
1N~ 120V 60Hz								
Rated power consumption	[kW]	0.6	0.6	0.6	0.6	0.6	1.1	1.1
Convection power	[kW]	0.1	0.1	0.1	0.1	0.1	0.2	0.2
Steam power	[kW]	0.1	0.1	0.1	0.1	0.1	0.1	0.1
Motor power	[kW]	0.4	0.4	0.4	0.4	0.4	0.7	0.7
Rated current	[A]	5.7	5.7	5.7	5.7	5.7	9.9	9.9
Fuse rating	[A]	16	16	16	16	16	16	16
Recommended conductor cross-section for wires laid uncovered in air up to 5 m in length.	[mm^2]	3G2.5	3G2.5	3G2.5	3G2.5	3G2.5	3G2.5	3G2.5
Recommended residual-current device	Type	A	A	A	A	A	A	A
Optional residual-current device	Type	B/F	B/F	B/F	B/F	B/F	B/F	B/F
2~ 230 V 50/60Hz								
Rated power consumption	[kW]	0.6	0.6	0.6	0.6	0.6	0.6	0.6
Convection power	[kW]	0.1	0.1	0.1	0.1	0.1	0.2	0.2
Steam power	[kW]	0.1	0.1	0.1	0.1	0.1	0.1	0.1
Motor power	[kW]	0.35	0.35	0.35	0.35	0.35	0.35	0.35
Rated current	[A]	2.7	2.7	2.7	2.7	2.7	4.7	4.7
Fuse rating	[A]	16	16	16	16	16	16	16

		6.10	6.20	10.10	10.20	12.20	20.10	20.20
Recommended conductor cross-section for wires laid uncovered in air up to 5 m in length.	[mm^2]	3G2.5	3G2.5	3G2.5	3G2.5	3G2.5	3G2.5	3G2.5
Recommended residual-current device	Type	A	A	A	A	A	A	A
Optional residual-current device	Type	B/F	B/F	B/F	B/F	B/F	B/F	B/F

Convotherm 4 GS

		6.10	6.20	10.10	10.20	12.20	20.10	20.20
1N~ 100V 50/60Hz								
Rated power consumption	[kW]	0.5	0.5	0.5	0.5	0.5	1.0	1.0
Convection power	[kW]	0.1	0.1	0.1	0.1	0.1	0.2	0.2
Motor power	[kW]	0.35	0.35	0.35	0.35	0.35	0.7	0.7
Rated current	[A]	5.2	5.2	5.2	5.2	5.2	9.8	9.8
Fuse rating	[A]	16	16	16	16	16	16	16
Recommended conductor cross-section for wires laid uncovered in air up to 5 m in length.	[mm^2]	3G2.5	3G2.5	3G2.5	3G2.5	3G2.5	3G2.5	3G2.5
Recommended residual-current device	Type	A	A	A	A	A	A	A
Optional residual-current device	Type	B/F	B/F	B/F	B/F	B/F	B/F	B/F
1N~ 230V 50/60Hz								
Rated power consumption	[kW]	0.6	0.6	0.6	0.6	0.6	1.1	1.1
Convection power	[kW]	0.1	0.1	0.1	0.1	0.1	0.2	0.2
Motor power	[kW]	0.35	0.35	0.35	0.35	0.35	0.7	0.7
Rated current	[A]	2.3	2.3	2.3	2.3	2.3	4.3	4.3
Fuse rating	[A]	16	16	16	16	16	16	16
Recommended conductor cross-section for wires laid uncovered in air up to 5 m in length.	[mm^2]	3G2.5	3G2.5	3G2.5	3G2.5	3G2.5	3G2.5	3G2.5
Recommended residual-current device	Type	A	A	A	A	A	A	A
Optional residual-current device	Type	B/F	B/F	B/F	B/F	B/F	B/F	B/F
1N~120V 60Hz								
Rated power consumption	[kW]	0.5	0.5	0.5	0.5	0.5	1.0	1.0
Convection power	[kW]	0.1	0.1	0.1	0.1	0.1	0.2	0.2
Motor power	[kW]	0.4	0.4	0.4	0.4	0.4	0.7	0.7
Rated current	[A]	4.7	4.7	4.7	4.7	4.7	8.9	8.9
Fuse rating	[A]	16	16	16	16	16	16	16
Recommended conductor cross-section for wires laid uncovered in air up to 5 m in length.	[mm^2]	3G2.5	3G2.5	3G2.5	3G2.5	3G2.5	3G2.5	3G2.5
Recommended residual-current device	Type	A	A	A	A	A	A	A
Optional residual-current device	Type	B/F	B/F	B/F	B/F	B/F	B/F	B/F
2~ 230 V 50/60Hz								
Rated power consumption	[kW]	0.5	0.5	0.5	0.5	0.5	1.0	1.0
Convection power	[kW]	0.1	0.1	0.1	0.1	0.1	0.2	0.2
Motor power	[kW]	0.35	0.35	0.35	0.35	0.35	0.7	0.7
Rated current	[A]	2.3	2.3	2.3	2.3	2.3	4.3	4.3
Fuse rating	[A]	16	16	16	16	16	16	16
Recommended conductor cross-section for wires laid uncovered in air up to 5 m in length.	[mm^2]	3G2.5	3G2.5	3G2.5	3G2.5	3G2.5	3G2.5	3G2.5

		6.10	6.20	10.10	10.20	12.20	20.10	20.20
Recommended residual-current device	Type	A	A	A	A	A	A	A
Optional residual-current device	Type	B/F	B/F	B/F	B/F	B/F	B/F	B/F

9.4 Gas specification, natural gas 2H (E), natural gas 2L (LL), propane 3P, liquefied gas 3B/P

Convotherm 4 GB/GS

Gas type		Natural gas 2H (E)	Natural gas 2L (LL)	Propane 3P	Liquefied gas 3B/P
Standard test gas, code		G20	G25	G31	G30/G31
Operating materials					
Natural gas, LPG		x	x	x	x
Gas supply values					
Gas pipe connection		R 3/4"	R 3/4"	R 3/4"	R 3/4"
Supply flow pressure	[mbar]	20 (17 - 25)	20/25 (18 - 30)	29/37/50 (25 - 57.5)	29/37/50 (25 - 57.5)
Gas data (as per CE) at 15 °C and 1013 mbar dry					
Lower Wobbe Index W_i	[MJ/m^3]	45.7 (36.8 - 49.6)	37.4 (30.9 - 40.5)	70.7 (68.1 - 70.7)	80.6 (68.1 - 80.6)
Upper Wobbe Index W_S	[MJ/m^3]	50.7 (40.9 - 54.7)	41.5 (34.4 - 44.8)	76.8 (72.9 - 76.8)	87.3 (72.9 - 87.3)
Lower calorific value H_i	[MJ/m^3]	34	29.3	88	116.1
	[MJ/kg]	-	-	46.3	45.7
Higher calorific value H_S	[MJ/m^3]	37.8	32.5	95.7	125.8
	[MJ/kg]	-	-	50.4	49.5
Exhaust gas extraction system					
Air conditioning system with safety shutdown		mandatory	mandatory	mandatory	mandatory
Exhaust gas values					
CO_2	[%]	9.3 - 9.5	9.1 - 9.3	10.8 - 11.2	12.8 - 13.3
CO	[ppm]	< 500	< 500	< 500	< 500

9.5 Gas specification, natural gas (AUS/NZL), propane (AUS/NZL)

Convotherm 4 GB/GS

Gas type		Natural gas (AUS/NZL)	Propane (AUS/NZL)
Operating materials			
Natural gas, Propane		x	x
Gas supply values			
Gas pipe connection		R 3/4"	R 3/4"
Supply flow pressure	[kPa]	1.13 (1.0 - 5.0)	2.75 (2.75 - 6.0)
Exhaust gas extraction system			
Air conditioning system with safety shutdown		mandatory	mandatory
Exhaust gas values			
Exhaust gas value CO_2	[%]	9.5 - 9.7	10.8 - 11.0
Exhaust gas value CO	[ppm]	< 500	< 500

9.6 Gas specification, natural gas (JPN), propane (JPN)

Convotherm 4 GB/GS

Gas type		Natural gas 13A (JPN)	Propane (JPN)
Operating materials			
Natural gas, Propane		x	x
Gas supply values			
Gas pipe connection		R 3/4"	R 3/4"
Supply flow pressure	[kPa]	2.0 (1.0 - 2.5)	2.8 (2.0 - 3.3)
Gas data (as per CE) at 15 °C and 1013 mbar dry			
Wobbe index (Ws)	[MJ/m³N]	55.3 (52.7 - 57.8)	84.3
Exhaust gas extraction system			
Air conditioning system with safety shutdown		mandatory	mandatory
Exhaust gas values			
Exhaust gas value CO_2	[%]	Value ?	Value ?
Exhaust gas value CO	[ppm]	Value ?	Value ?

9.7 Gas specification, natural gas 13A (KOR), propane (KOR)

Convotherm 4 GB/GS

Gas type		Natural gas 13A (KOR)	Propane (KOR)
Code		LNG	LPG
Operating materials			
Natural gas, Propane		x	x
Gas supply values			
Gas pipe connection		R 3/4"	R 3/4"
Supply flow pressure	[kPa]	2.0 (1.0 - 2.5)	2.8 (2.0 - 3.3)
Gas data (as per CE) at 15 °C and 1013 mbar dry			
Wobbe index (gross)	[MJ/m^3]	56.1 (52.8 - 57.8)	84.6
Gross caloric value (Hs)	[MJ/m^3]	44.5	110
Exhaust gas extraction system			
Air conditioning system with safety shutdown		mandatory	mandatory
Exhaust gas values			
Exhaust gas value CO_2	[%]	Value ?	Value ?
Exhaust gas value CO	[ppm]	Value ?	Value ?

9.8 Gas consumption

Convotherm 4 GB/GS

		6.10	6.20	10.10	10.20	12.20	20.10	20.20
G20: Natural gas 2H (E)	[m^3/h]	1.2	2.1	2.1	3.3	3.3	4.2	6.6
G25: Natural gas 2L (LL)	[m^3/h]	1.4	2.5	2.5	3.8	3.8	4.9	7.6
G25.3: Natural gas 2K	[m^3/h]	1.2	2.3	2.3	3.4	3.4	4.5	6.8
G30/G31: Propane 3P / liquefied gas 3B/P*	[kg/h]	0.9	1.6	1.7	2.4	2.4	3.4	4.8

*The heat output is up to 15% higher with 3B/P LPG.

9.9 Exhaust gas output rate

Convotherm 4 GB/GS

		6.10	6.20	10.10	10.20	20.10	12.20	20.20
Air consumption for combustion	[m^3/h]	24	44	44	68	68	88	136
Exhaust gas output rate	[m^3/h]	51	92	92	143	143	185	286

9.10 Heat output

Convotherm 4 GB/GS

		6.10	6.20	10.10	10.20	12.20	20.10	20.20
G20: Natural gas 2H (E) (referred to lower calorific value H_i)								
Convection burner	[kW]	11	21	21	31	31	42	62
Boiler burner (for GB)	[kW]	11	19	19	31	31	31	31
G25: Natural gas 2L (LL) (referred to lower calorific value H_i)								
Convection burner	[kW]	10.5	20	20	30	30	40	60
Boiler burner (for GB)	[kW]	10.5	18	18	30	30	30	30
G30/G31: Propane 3P* (referred to lower calorific value H_i)								
Convection burner	[kW]	11.5	21	22	31	31	44	62
Boiler burner (for GB)	[kW]	11.5	19	20	31	31	31	31
Natural gas (AUS/NZL)								
Convection burner	[MJ/h]	42	74	81	115	115	162	230
Boiler burner (for GB)	[MJ/h]	41	74	71	122	122	122	122
Propane (AUS/NZL)								
Convection burner	[MJ/h]	42	74	81	115	115	162	230
Boiler burner (for GB)	[MJ/h]	41	74	71	122	122	122	122
Natural gas 13A (JPN)								
Convection burner	[kW]	11	-	20	-	30	40	60
Boiler burner (for GB)	[kW]	11	-	18	-	30	30	30
Propane (JPN)								
Convection burner	[kW]	11.5	-	21	-	31	42	62
Boiler burner (for GB)	[kW]	11.5	-	19	-	31	31	31
LNG: Natural gas 13A (KOR)								
Convection burner	Units ?	Value ?	Value ?	Value ?	Value ?	Value ?	Value ?	Value ?
Boiler burner (for GB)	Units ?	Value ?	Value ?	Value ?	Value ?	Value ?	Value ?	Value ?
LPG: Propane (KOR)								
Convection burner	Units ?	Value ?	Value ?	Value ?	Value ?	Value ?	Value ?	Value ?
Boiler burner (for GB)	Units ?	Value ?	Value ?	Value ?	Value ?	Value ?	Value ?	Value ?

*The heat output is up to 15% higher with 3B/P LPG.

9.11 Dissipated heat

Convotherm 4 EB/ES

		6.10	6.20	10.10	10.20	12.20	20.10	20.20
Latent heat	[kJ/h]	2100	3500	3500	6400	6900	6900	11000
	[kW]	0.58	0.97	0.97	1.78	1.92	1.92	3.06
Sensible heat	[kJ/h]	2500	4500	4500	7800	7800	8900	14100
	[kW]	0.69	1.25	1.25	2.17	2.17	2.47	3.92

Convotherm 4 GB/GS

		6.10	6.20	10.10	10.20	12.20	20.10	20.20
Latent heat	[kJ/h]	2100	3500	3500	7100	8200	7100	12200
	[kW]	0.58	0.97	0.97	1.97	2.28	1.97	3.39
Sensible heat	[kJ/h]	2500	4100	4100	7200	11000	11000	15400
	[kW]	0.69	1.14	1.14	2.00	3.06	3.06	4.28

9.12 Water connection

Convotherm 4 EB ES GB GS

Water supply (cold only)		
Water supply		2 x G 3/4" fixed connection, optionally including connecting pipe (min. DN13 / 1/2")
Flow pressure	[kPa]	150 - 600 (1.5 - 6 bar)
Pressure gauge in the water supply		
6.10, 6.20, 10.10, 10.20	[kPa]	100 (1 bar)
12.20, 20.10, 20.20	[kPa]	150 (1.5 bar)
Appliance drain		
Model 6.10, 6.20, 10.10, 10.20		Fixed connection (recommended) or funnel waste trap
Model 12.20, 20.10, 20.20		Fixed connection (recommended) or open tank or channel/gully
Type	DN	DN 50

9.13 Water quality

Convotherm 4 EB/GB

Water hardness for both water-supply connections: Cleaning, recoil hand shower (A) and boiler (B)		
Water quality		▪ Drinking water ▪ Hard water
General hardness (GH)		
- in German degrees of hardness	[°dH]	4 - 20
- in French degrees of hardness	[TH]	7 - 35
- in English degrees of hardness	[°e]	5 - 25
- in ppm $CaCO_3$	[ppm]	70 - 360
- in mmol/l alkaline earth ions	[mmol/l]	0.7 - 3.6
Properties		
Temperature	[°C]	max. 40
Electrical conductivity	[µS/cm]	min. 20
pH		6.5 - 8.5
Cl^-	[mg/l]	max. 60
Cl_2	[mg/l]	max. 0.2
SO_4^{2-}	[mg/l]	max. 150
Fe	[mg/l]	max. 0.1

Convotherm 4 ES/GS

Water hardness for water connection (A) for water injection		
Water quality		▪ Drinking water ▪ Soft water
General hardness (GH)		
- in German degrees of hardness	[°dH]	4 - 7
- in French degrees of hardness	[TH]	7 - 13
- in English degrees of hardness	[°e]	5 - 9
- in ppm $CaCO_3$	[ppm]	70 - 125
- in mmol/l alkaline earth ions	[mmol/l]	0.7 - 1.3
Water hardness for water connection (B) for cleaning system, recoil hand shower		
Water quality		▪ Drinking water ▪ Hard water
General hardness (GH)		
- in German degrees of hardness	[°dH]	4 - 20
- in French degrees of hardness	[TH]	7 - 35
- in English degrees of hardness	[°e]	5 - 25
- in ppm $CaCO_3$	[ppm]	70 - 360
- in mmol/l alkaline earth ions	[mmol/l]	0.7 - 3.6
Properties		
Temperature	[°C]	max. 40
Electrical conductivity	[µS/cm]	min. 20
pH		6.5 - 8.5
Cl^-	[mg/l]	max. 60
Cl_2	[mg/l]	max. 0.2
SO_4^{2-}	[mg/l]	max. 150
Fe	[mg/l]	max. 0.1

9.14 Boiler

Convotherm 4 EB/GB

		6.10	6.20	10.10	10.20	12.20	20.10	20.20
Steam output	[l/h]	14.4	28.7	28.7	42.1	49.9	43.0	63.6
Contents	[l]	3.8	6.0	6.0	8.0	10.9	8.2	10.9

9.15 Water consumption, cooking

Convotherm 4 EB/GB

		6.10	6.20	10.10	10.20	12.20	20.10	20.20
Hard water and soft water								
Average consumption without cleaning	[l/h]	3.0	7.2	6.0	8.8	10.5	9.9	13.4
Maximum possible water flow rate	[l/min]	15	15	15	15	15	15	15

Convotherm 4 ES/GS

		6.10	6.20	10.10	10.20	12.20	20.10	20.20
Hard water and soft water								
Average consumption without cleaning	[l/h]	3.5	7.6	6.3	11.1	13.3	12.2	17.7
Maximum possible water flow rate	[l/min]	15	15	15	15	15	15	15
Soft water (specification of water treatment system)								
Average consumption without cleaning	[l/h]	2.3	5.1	4.2	7.4	8.8	8.1	11.8
Maximum possible water flow rate	[l/min]	0.6	0.6	0.6	0.6	0.6	0.6	0.6

9.16 Water consumption, cooking and cleaning

Convotherm 4 EB/GB

		6.10	6.20	10.10	10.20	12.20	20.10	20.20
Hard water and soft water								
Average water consumption including cleaning process	[l/h]	6.8	11.0	9.8	12.6	14.2	13.7	17.1

Convotherm 4 ES/GS

		6.10	6.20	10.10	10.20	12.20	20.10	20.20
Hard water and soft water								
Average water consumption including cleaning process	[l/h]	7.3	11.3	10.1	14.8	17.0	15.9	21.4

10 Connection diagrams

Purpose of this chapter

This chapter contains the dimensional drawings and connection points for your combi oven.

Contents

This chapter contains the following topics:

	Page
Dimensions and connection points for electric appliances	141
Dimensions and connection points for gas appliances	156

10.1 Dimensions and connection points for electric appliances

	Page
Convotherm 4 6.10 electric appliance	142
Convotherm 4 6.20 electric appliance	144
Convotherm 4 10.10 electric appliance	146
Convotherm 4 10.20 electric appliance	148
Convotherm 4 12.20 electric appliance	150
Convotherm 4 20.10 electric appliance	152
Convotherm 4 20.20 electric appliance	154

10.1.1 Convotherm 4 6.10 electric appliance

Dimensions and connection points for C4 6.10 (right-hinged appliance door)

Front view

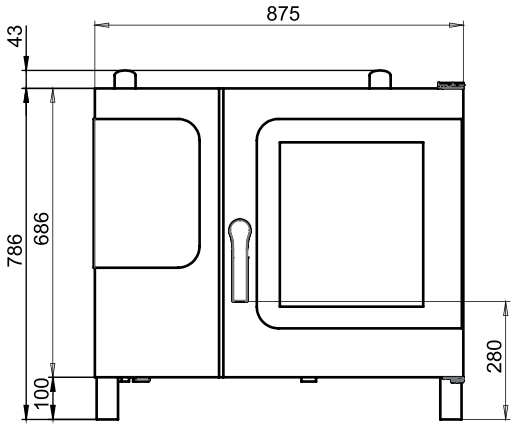

Connection points in appliance floor

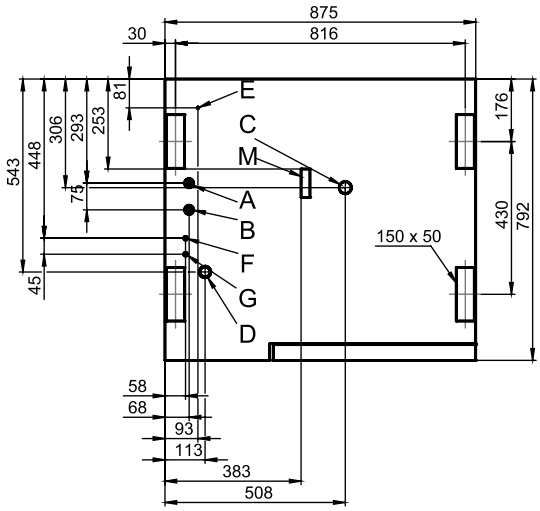

Detailed view of drain connection

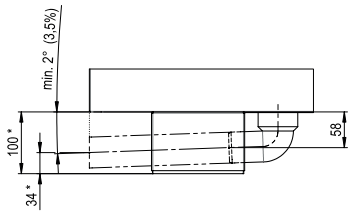

* Distance depends on how far the appliance feet are extended (max. +25 mm)

View from above with wall clearances

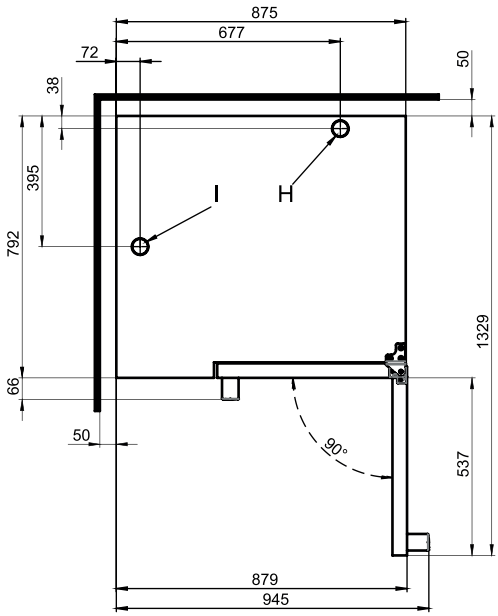

Meaning of labelled elements

A	Water connection Soft waterG 3/4"
B	Water connection Hard waterG 3/4"
C	Drain connection DN DN 50
D	Electrical connection
E	Equipotential bonding
F	Rinse-aid connection (optional)
G	Cleaning-agent connection (optional)
H	Air vent ∅ 50 mm
I	Ventilation port ∅ 50 mm
M	Safety overflow 80 x 25 mm

Dimensions and connection points for C4 6.10 (disappearing door)

Front view

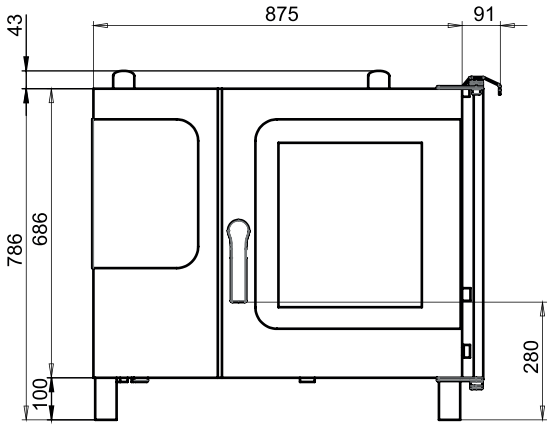

Connection points in appliance floor

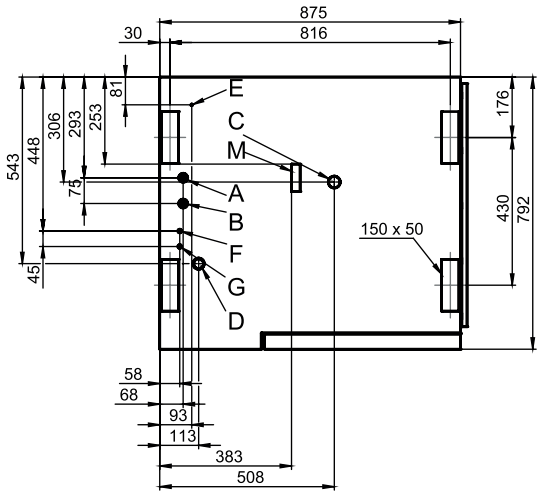

Detailed view of drain connection

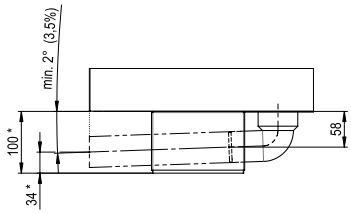

* Distance depends on how far the appliance feet are extended (max. +25 mm)

View from above with wall clearances

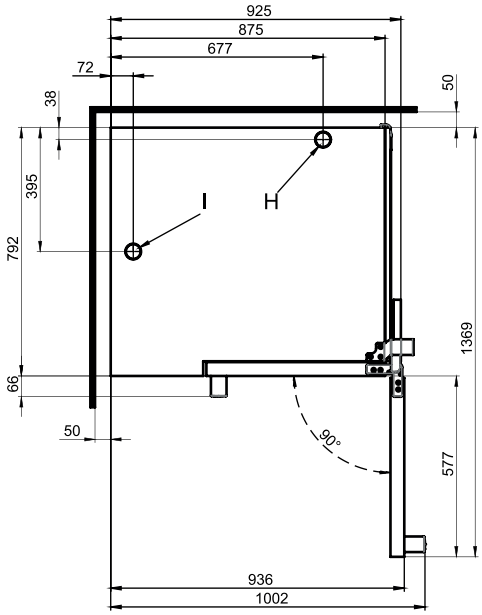

Meaning of labelled elements

A	Water connection Soft water G 3/4"
B	Water connection Hard water G 3/4"
C	Drain connection DN 50
D	Electrical connection
E	Equipotential bonding
F	Rinse-aid connection (optional)
G	Cleaning-agent connection (optional)
H	Air vent ∅ 50 mm
I	Ventilation port ∅ 50 mm
M	Safety overflow 80 x 25 mm

10.1.2 Convotherm 4 6.20 electric appliance

Dimensions and connection points for C4 6.20 (right-hinged appliance door)

Front view

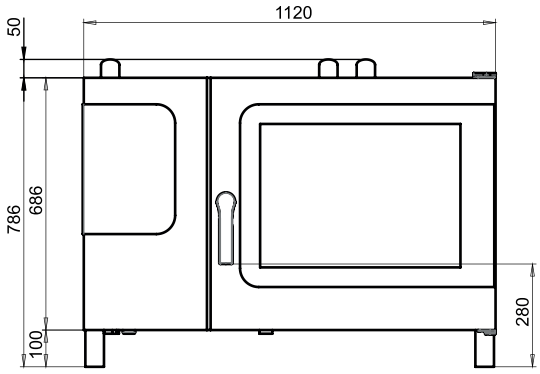

Connection points in appliance floor

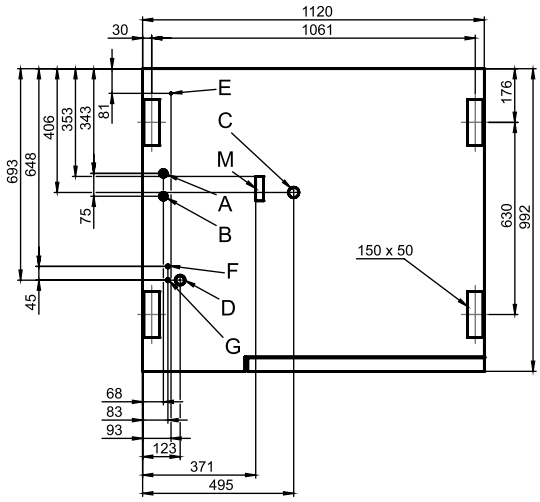

Detailed view of drain connection

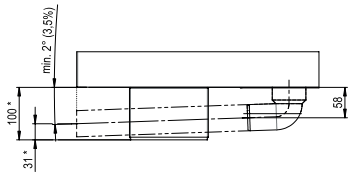

* Distance depends on how far the appliance feet are extended (max. +25 mm)

View from above with wall clearances

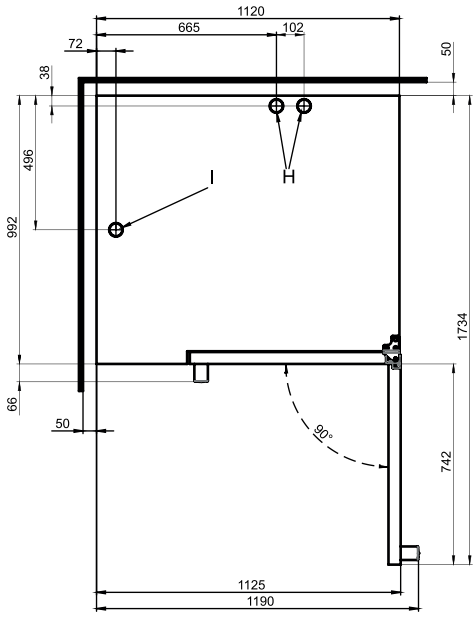

Meaning of labelled elements

A	Water connection Soft water G 3/4"
B	Water connection Hard water G 3/4"
C	Drain connection DN 50
D	Electrical connection
E	Equipotential bonding
F	Rinse-aid connection (optional)
G	Cleaning-agent connection (optional)
H	Air vent ∅ 50 mm
I	Ventilation port ∅ 50 mm
M	Safety overflow 80 x 25 mm

Dimensions and connection points for C4 6.20 (disappearing door)

Front view

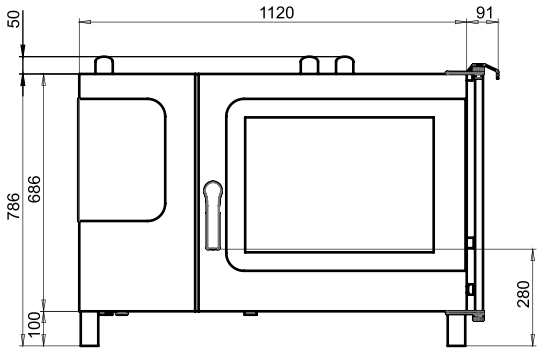

Connection points in appliance floor

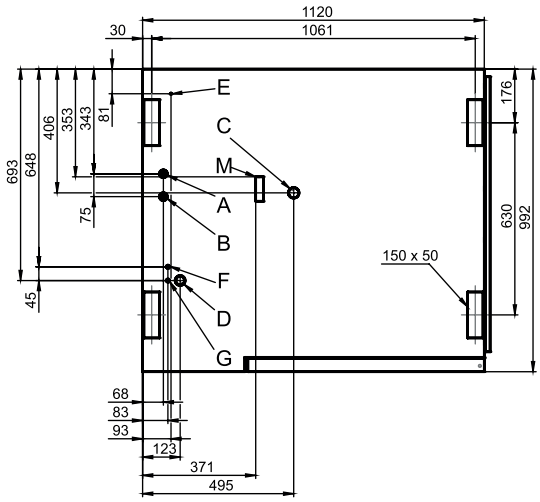

Detailed view of drain connection

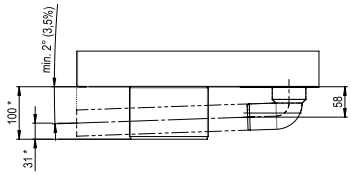

* Distance depends on how far the appliance feet are extended (max. +25 mm)

View from above with wall clearances

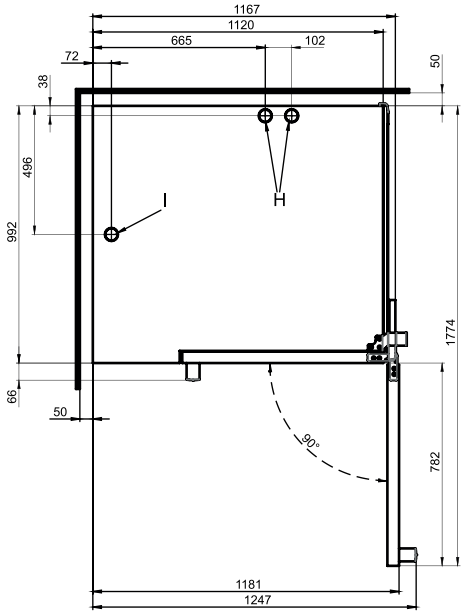

Meaning of labelled elements

A	Water connection Soft water G 3/4"
B	Water connection Hard water G 3/4"
C	Drain connection DN 50
D	Electrical connection
E	Equipotential bonding
F	Rinse-aid connection (optional)
G	Cleaning-agent connection (optional)
H	Air vent ∅ 50 mm
I	Ventilation port ∅ 50 mm
M	Safety overflow 80 x 25 mm

10.1.3 Convotherm 4 10.10 electric appliance

Dimensions and connection points for C4 10.10 (right-hinged appliance door)

Front view

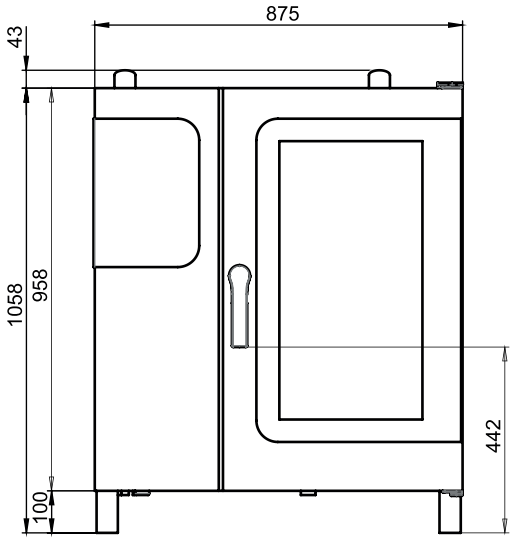

Connection points in appliance floor

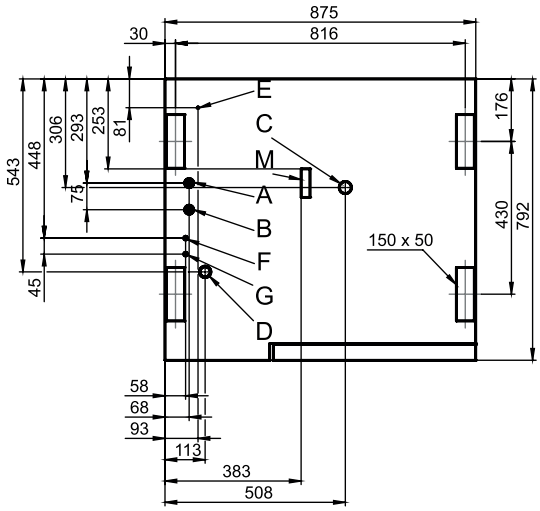

Detailed view of drain connection

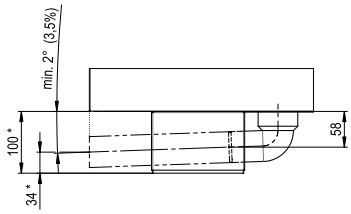

* Distance depends on how far the appliance feet are extended (max. +25 mm)

View from above with wall clearances

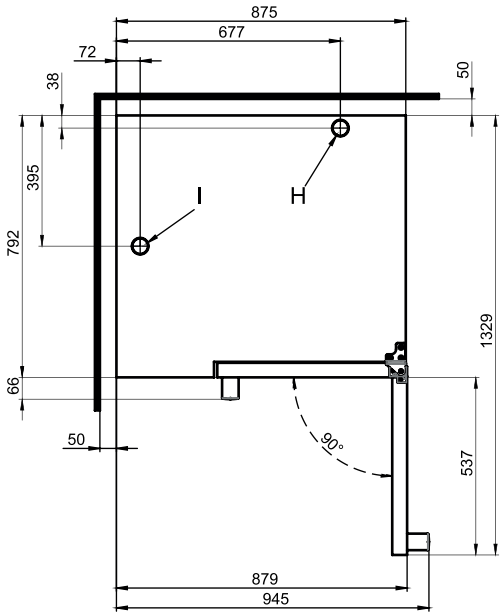

Meaning of labelled elements

A	Water connection Soft water G 3/4"
B	Water connection Hard water G 3/4"
C	Drain connection DN 50
D	Electrical connection
E	Equipotential bonding
F	Rinse-aid connection (optional)
G	Cleaning-agent connection (optional)
H	Air vent ∅ 50 mm
I	Ventilation port ∅ 50 mm
M	Safety overflow 80 x 25 mm

Dimensions and connection points for C4 10.10 (disappearing door)

Front view

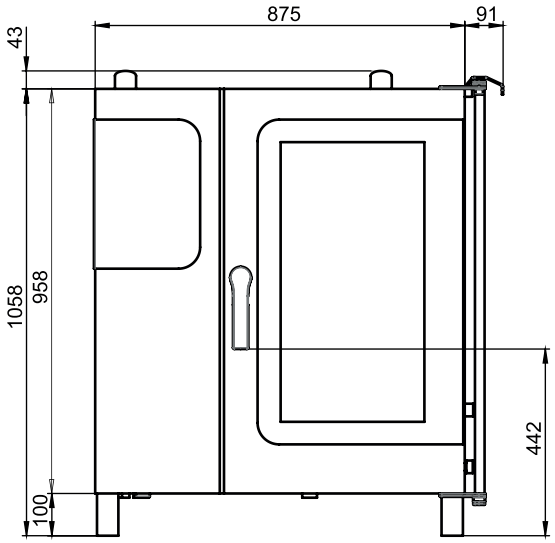

Connection points in appliance floor

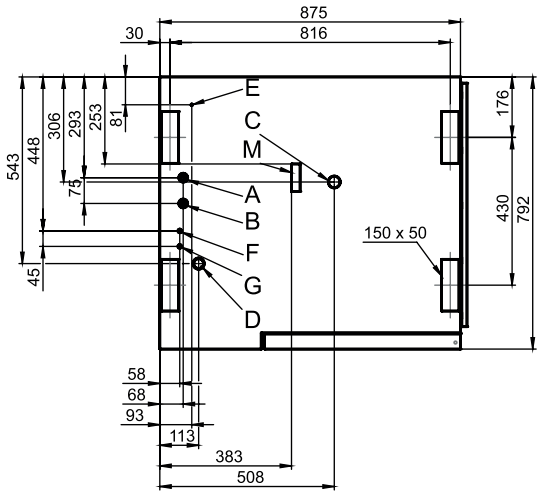

Detailed view of drain connection

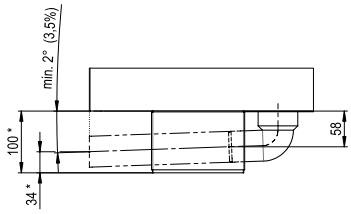

* Distance depends on how far the appliance feet are extended (max. +25 mm)

View from above with wall clearances

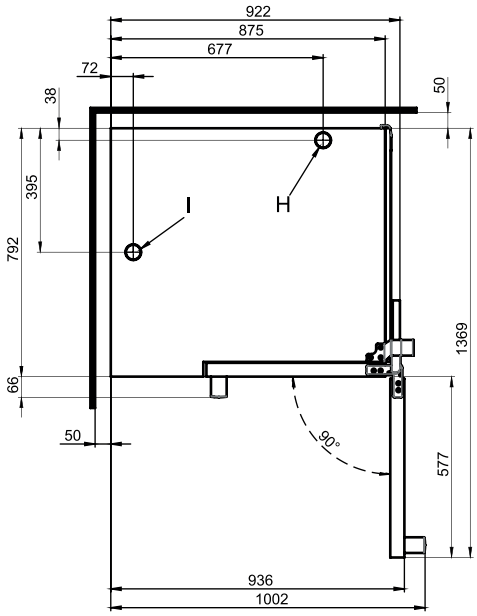

Meaning of labelled elements

A	Water connection Soft water G 3/4"
B	Water connection Hard water G 3/4"
C	Drain connection DN 50
D	Electrical connection
E	Equipotential bonding
F	Rinse-aid connection (optional)
G	Cleaning-agent connection (optional)
H	Air vent ∅ 50 mm
I	Ventilation port ∅ 50 mm
M	Safety overflow 80 x 25 mm

10.1.4 Convotherm 4 10.20 electric appliance

Dimensions and connection points for C4 10.20 (right-hinged appliance door)

Front view

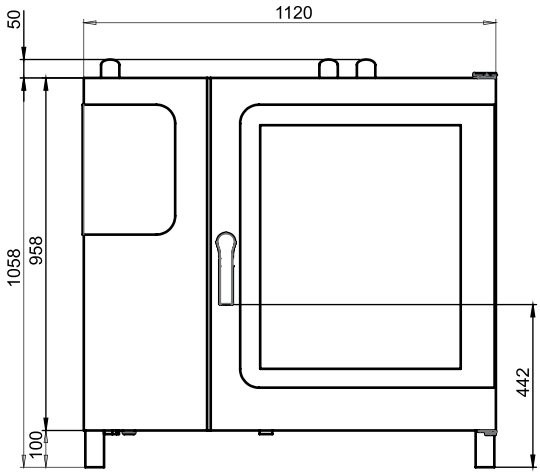

Connection points in appliance floor

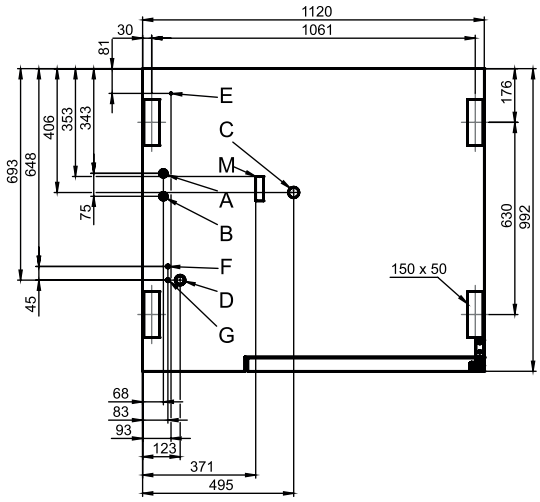

Detailed view of drain connection

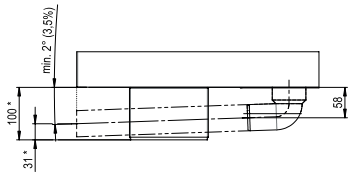

* Distance depends on how far the appliance feet are extended (max. +25 mm)

View from above with wall clearances

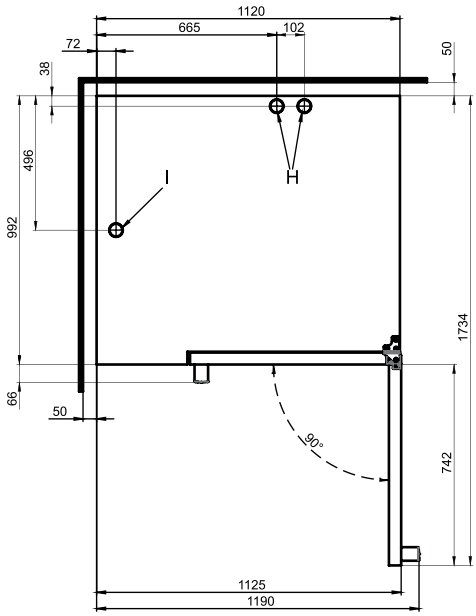

Meaning of labelled elements

A	Water connection Soft water G 3/4"
B	Water connection Hard water G 3/4"
C	Drain connection DN 50
D	Electrical connection
E	Equipotential bonding
F	Rinse-aid connection (optional)
G	Cleaning-agent connection (optional)
H	Air vent ∅ 50 mm
I	Ventilation port ∅ 50 mm
M	Safety overflow 80 x 25 mm

Dimensions and connection points for C4 10.20 (disappearing door)

Front view

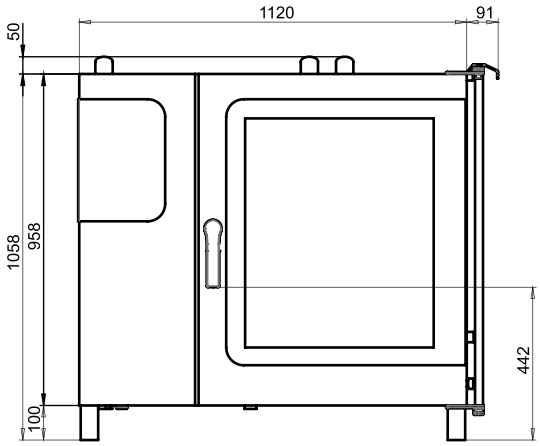

Connection points in appliance floor

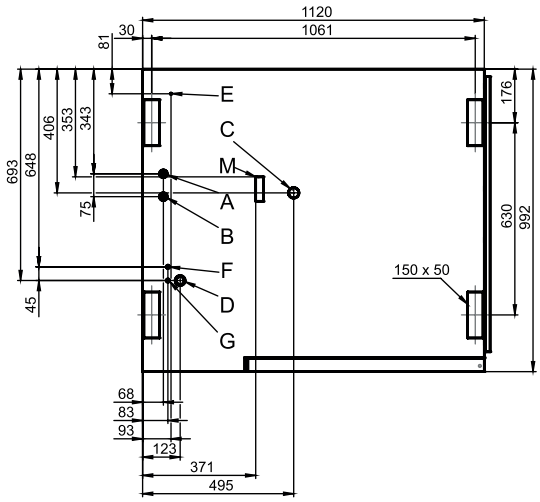

Detailed view of drain connection

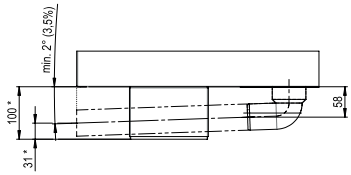

* Distance depends on how far the appliance feet are extended (max. +25 mm)

View from above with wall clearances

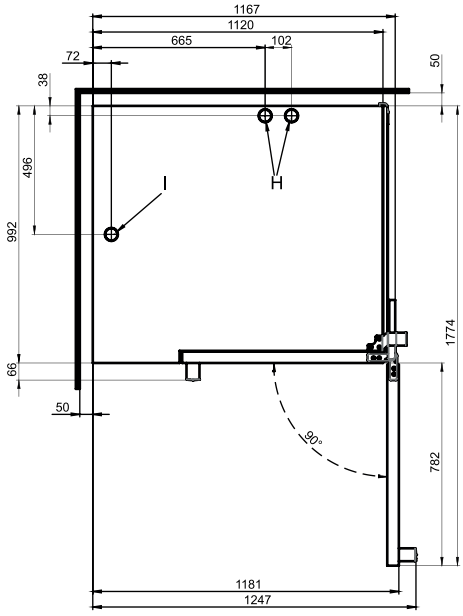

Meaning of labelled elements

- A Water connection Soft water G 3/4"
- B Water connection Hard water G 3/4"
- C Drain connection DN 50
- D Electrical connection
- E Equipotential bonding
- F Rinse-aid connection (optional)
- G Cleaning-agent connection (optional)
- H Air vent ∅ 50 mm
- I Ventilation port ∅ 50 mm
- M Safety overflow 80 x 25 mm

10.1.5 Convotherm 4 12.20 electric appliance

Dimensions and connection points for C4 12.20 (right-hinged appliance door)

Front view

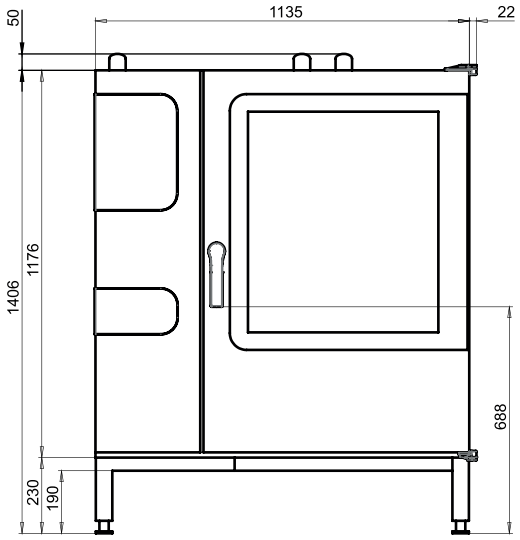

Connection points in appliance floor

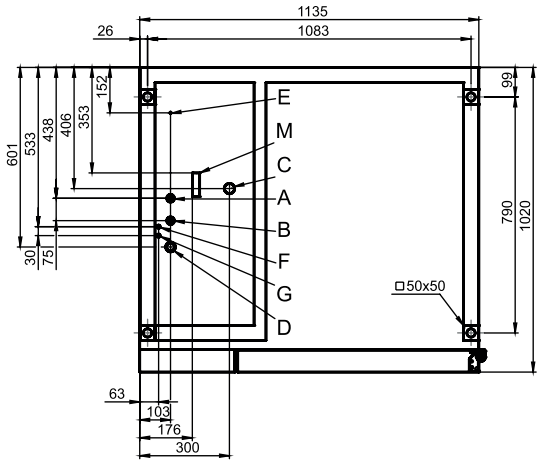

Detailed view of drain connection

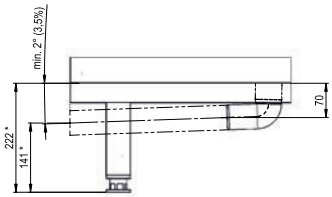

* Distance depends on how far the appliance feet are extended (max. +25 mm)

View from above with wall clearances

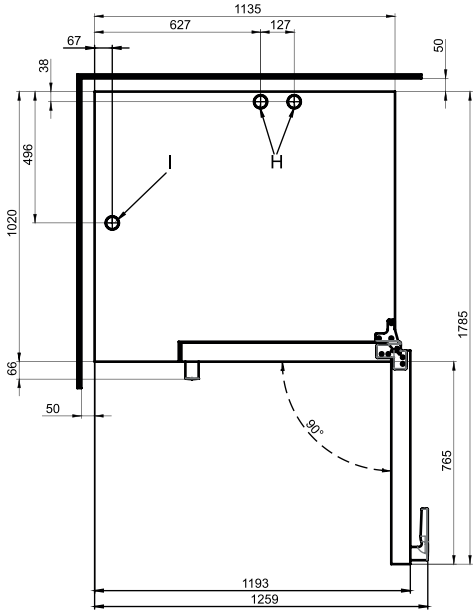

Meaning of labelled elements

A	Water connection Soft water G 3/4"
B	Water connection Hard water G 3/4"
C	Drain connection DN 50
D	Electrical connection
E	Equipotential bonding
F	Rinse-aid connection (optional)
G	Cleaning-agent connection (optional)
H	Air vent ∅ 50 mm
I	Ventilation port ∅ 50 mm
M	Safety overflow 80 x 25 mm

Dimensions and connection points for C4 12.20 (disappearing door)

Front view

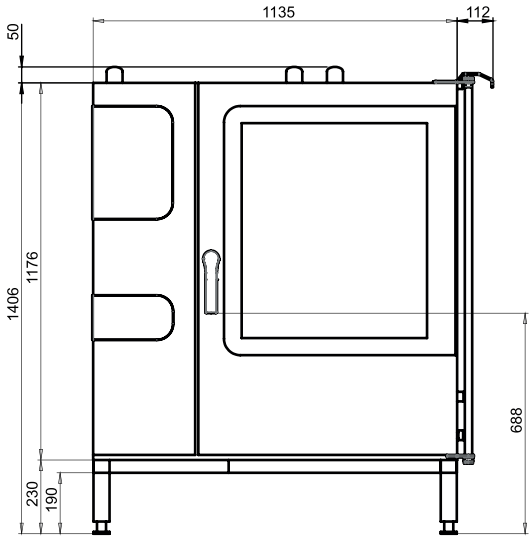

Connection points in appliance floor

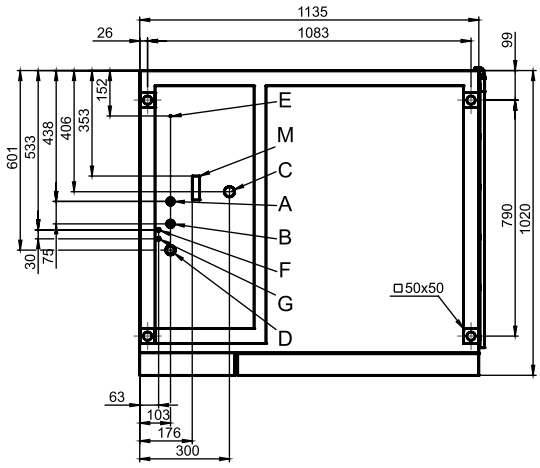

Detailed view of drain connection

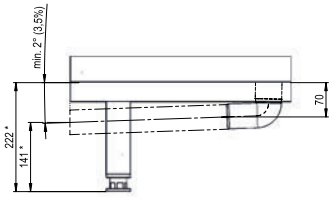

* Distance depends on how far the appliance feet are extended (max. +25 mm)

View from above with wall clearances

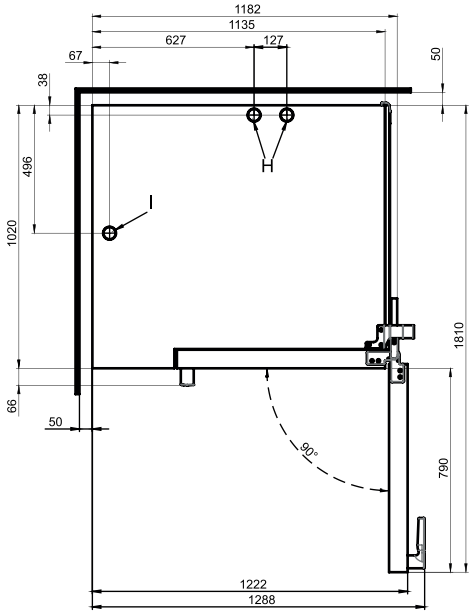

Meaning of labelled elements

A	Water connection Soft water G 3/4"
B	Water connection Hard water G 3/4"
C	Drain connection DN 50
D	Electrical connection
E	Equipotential bonding
F	Rinse-aid connection (optional)
G	Cleaning-agent connection (optional)
H	Air vent ∅ 50 mm
I	Ventilation port ∅ 50 mm
M	Safety overflow 80 x 25 mm

10.1.6 Convotherm 4 20.10 electric appliance

Dimensions and connection points for C4 20.10 (right-hinged appliance door)

Front view

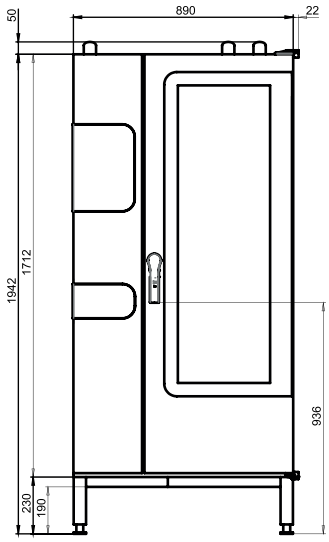

Connection points in appliance floor

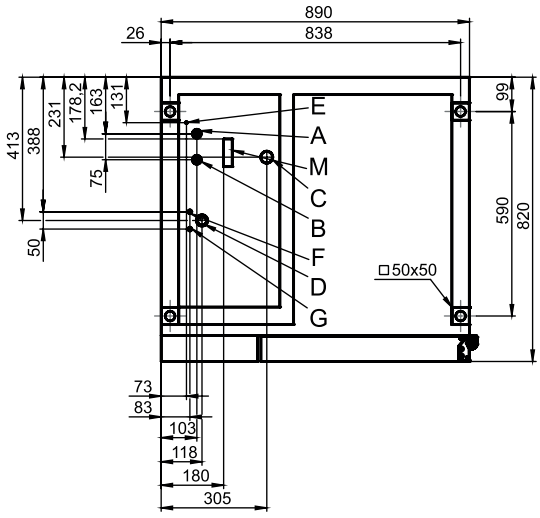

Detailed view of drain connection

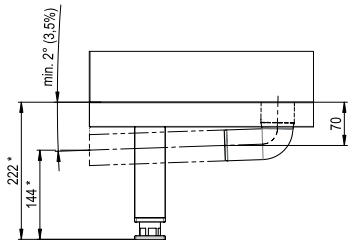

* Distance depends on how far the appliance feet are extended (max. +25 mm)

View from above with wall clearances

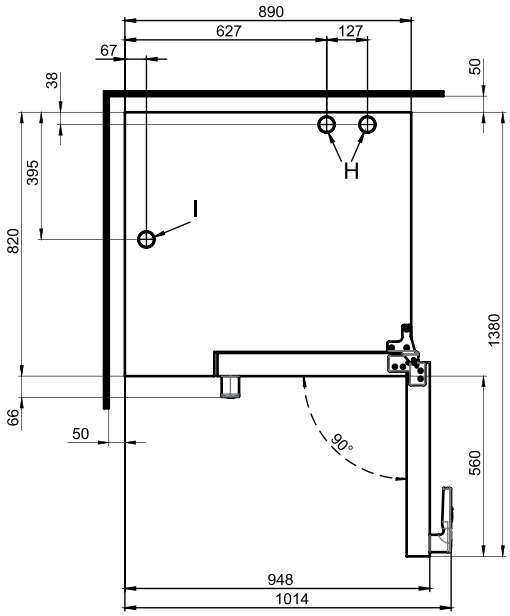

Meaning of labelled elements

A	Water connection Soft water G 3/4"
B	Water connection Hard water G 3/4"
C	Drain connection DN 50
D	Electrical connection
E	Equipotential bonding
F	Rinse-aid connection (optional)
G	Cleaning-agent connection (optional)
H	Air vent ∅ 50 mm
I	Ventilation port ∅ 50 mm
M	Safety overflow 80 x 25 mm

Dimensions and connection points for C4 20.10 (disappearing door)

Front view

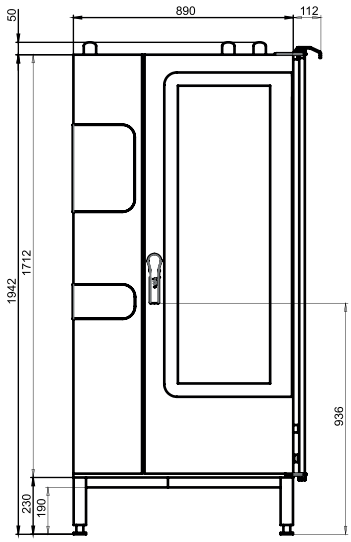

Connection points in appliance floor

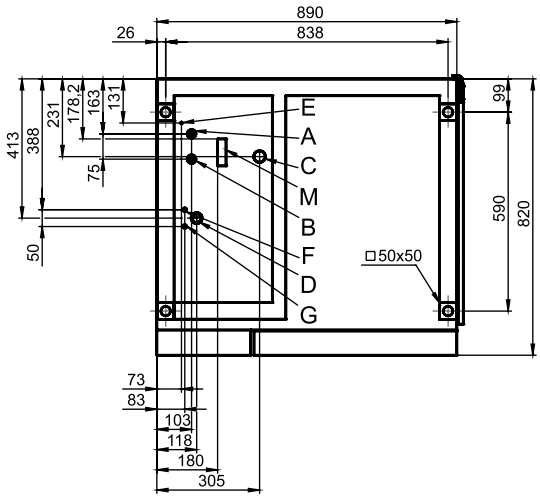

Detailed view of drain connection

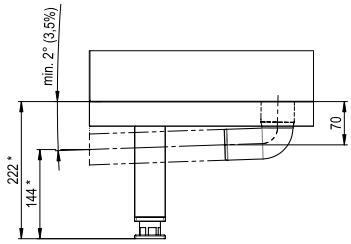

* Distance depends on how far the appliance feet are extended (max. +25 mm)

View from above with wall clearances

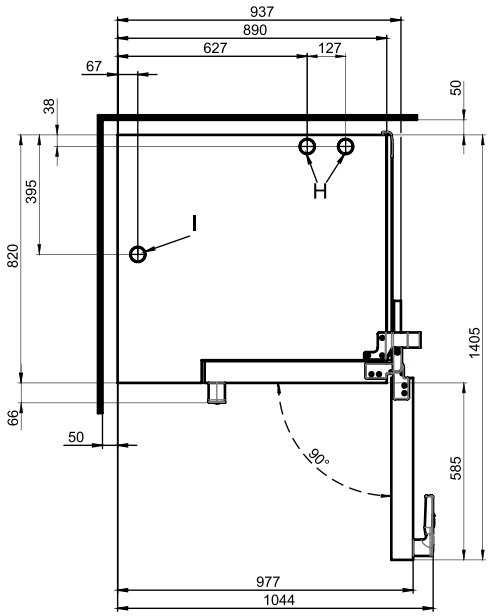

Meaning of labelled elements

A	Water connection Soft water G 3/4"
B	Water connection Hard water G 3/4"
C	Drain connection DN 50
D	Electrical connection
E	Equipotential bonding
F	Rinse-aid connection (optional)
G	Cleaning-agent connection (optional)
H	Air vent ∅ 50 mm
I	Ventilation port ∅ 50 mm
M	Safety overflow 80 x 25 mm

10.1.7 Convotherm 4 20.20 electric appliance

Dimensions and connection points for C4 20.20 (right-hinged appliance door)

Front view

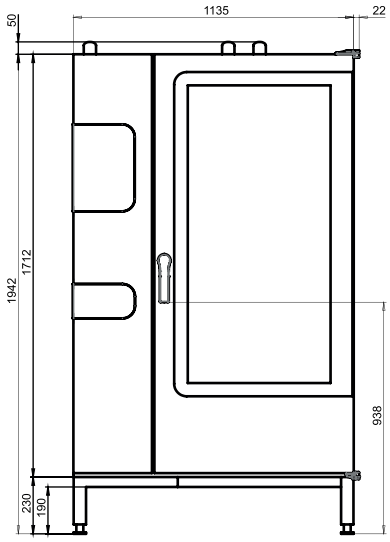

Connection points in appliance floor

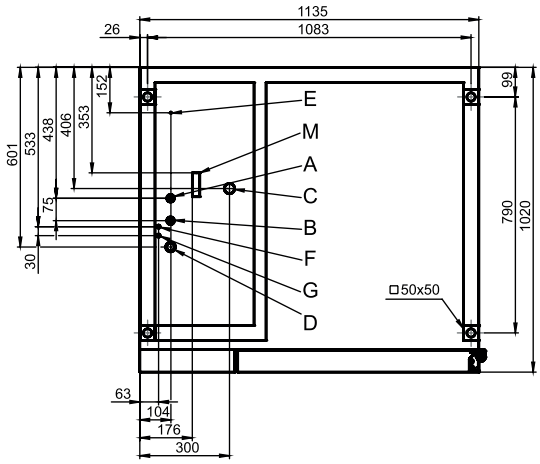

Detailed view of drain connection

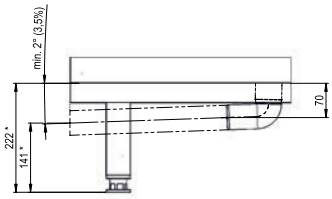

* Distance depends on how far the appliance feet are extended (max. +25 mm)

View from above with wall clearances

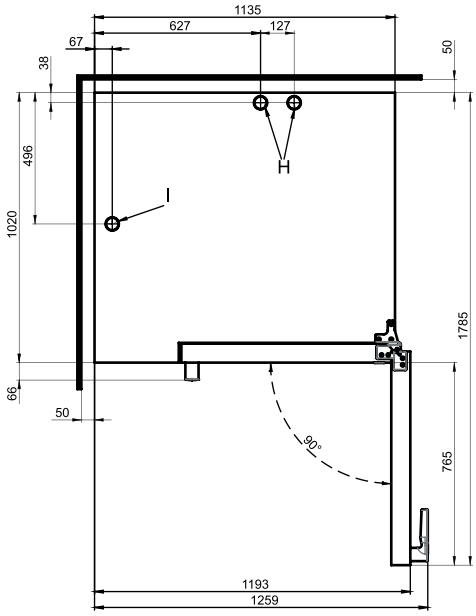

Meaning of labelled elements

A	Water connection Soft water G 3/4"
B	Water connection Hard water G 3/4"
C	Drain connection DN 50
D	Electrical connection
E	Equipotential bonding
F	Rinse-aid connection (optional)
G	Cleaning-agent connection (optional)
H	Air vent ∅ 50 mm
I	Ventilation port ∅ 50 mm
M	Safety overflow 80 x 25 mm

Dimensions and connection points for C4 20.20 (disappearing door)

Front view

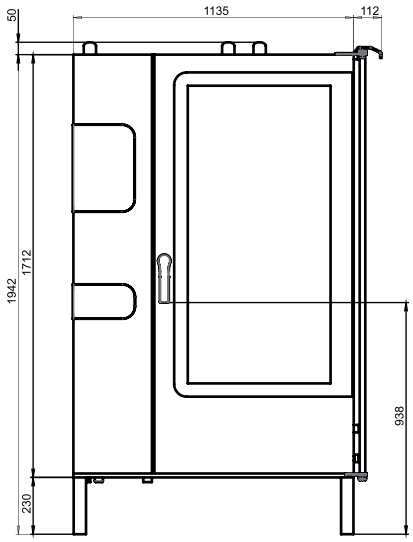

Connection points in appliance floor

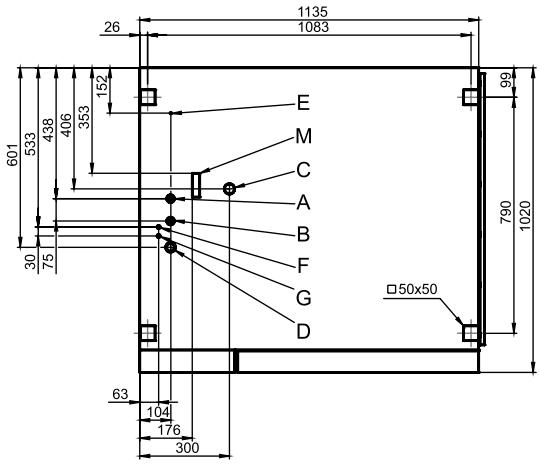

Detailed view of drain connection

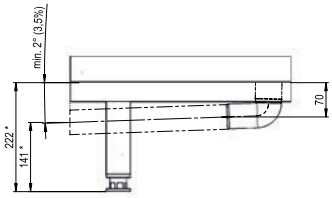

* Distance depends on how far the appliance feet are extended (max. +25 mm)

View from above with wall clearances

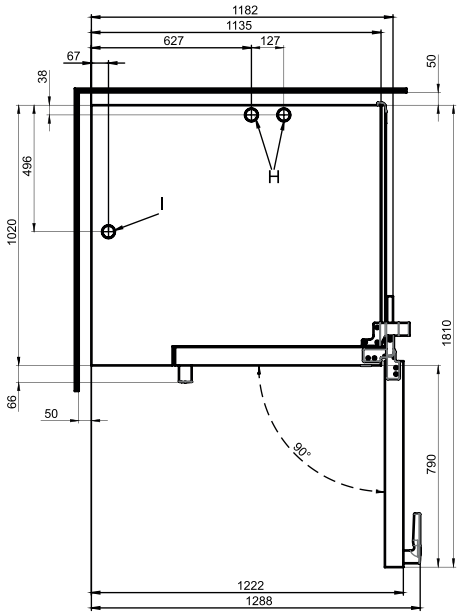

Meaning of labelled elements

- A Water connection Soft water G 3/4"
- B Water connection Hard water G 3/4"
- C Drain connection DN 50
- D Electrical connection
- E Equipotential bonding
- F Rinse-aid connection (optional)
- G Cleaning-agent connection (optional)
- H Air vent ∅ 50 mm
- I Ventilation port ∅ 50 mm
- M Safety overflow 80 x 25 mm

10.2 Dimensions and connection points for gas appliances

	Page
Convotherm 4 6.10 boiler gas appliance	157
Convotherm 4 6.10 injection gas appliance	159
Convotherm 4 6.20 boiler gas appliance	161
Convotherm 4 6.20 injection gas appliance	163
Convotherm 4 10.10 boiler gas appliance	165
Convotherm 4 10.10 injection gas appliance	167
Convotherm 4 10.20 boiler gas appliance	169
Convotherm 4 10.20 injection gas appliance	171
Convotherm 4 12.20 boiler gas appliance	173
Convotherm 4 12.20 injection gas appliance	175
Convotherm 4 20.10 boiler gas appliance	177
Convotherm 4 20.10 injection gas appliance	179
Convotherm 4 20.20 boiler gas appliance	181
Convotherm 4 20.20 injection gas appliance	183

10.2.1 Convotherm 4 6.10 boiler gas appliance

Dimensions and connection points for C4 6.10 (right-hinged appliance door)

Front view

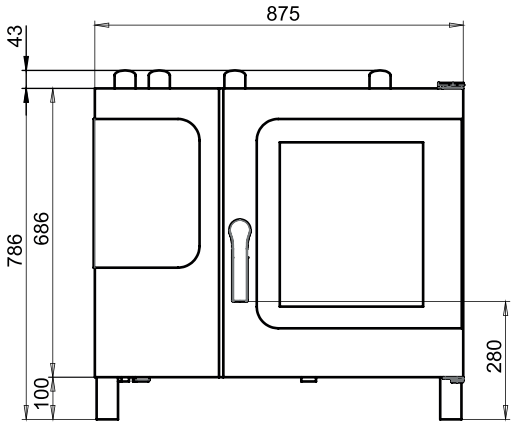

Connection points in appliance floor

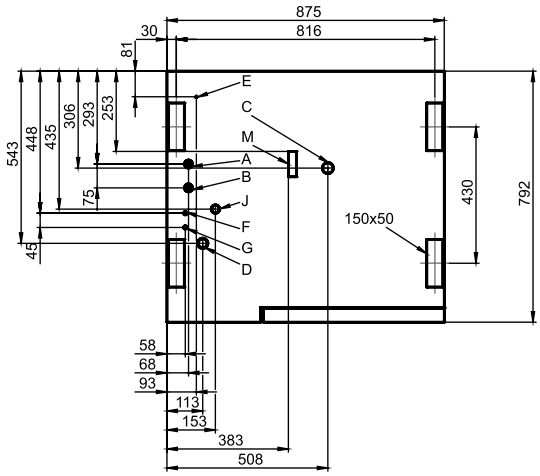

Detailed view of drain connection

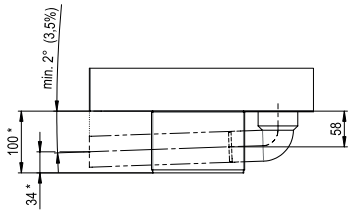

* Distance depends on how far the appliance feet are extended (max. +25 mm)

View from above with wall clearances

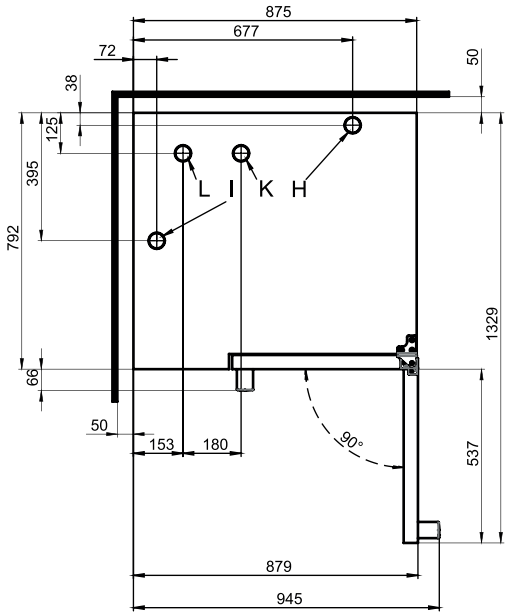

Meaning of labelled elements

A	Water connection Soft water G 3/4"
B	Water connection Hard water G 3/4"
C	Drain connection DN 50
D	Electrical connection
E	Equipotential bonding
F	Rinse-aid connection (optional)
G	Cleaning-agent connection (optional)
H	Air vent ∅ 50 mm
I	Ventilation port ∅ 50 mm
J	Gas connection
K	Exhaust outlet for convection burner ∅ 50 mm
L	Exhaust outlet for boiler burner ∅ 50 mm
M	Safety overflow 80 x 25 mm

Dimensions and connection points for C4 6.10 (disappearing door)

Front view

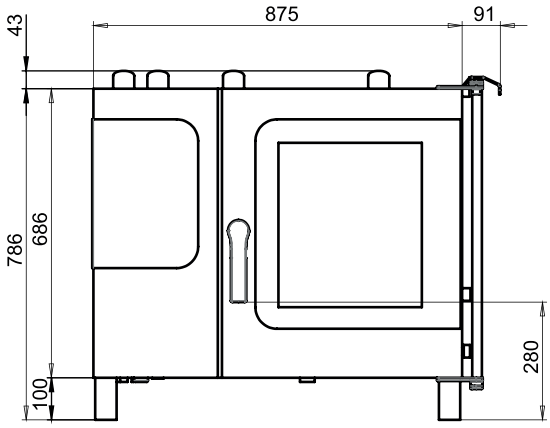

Connection points in appliance floor

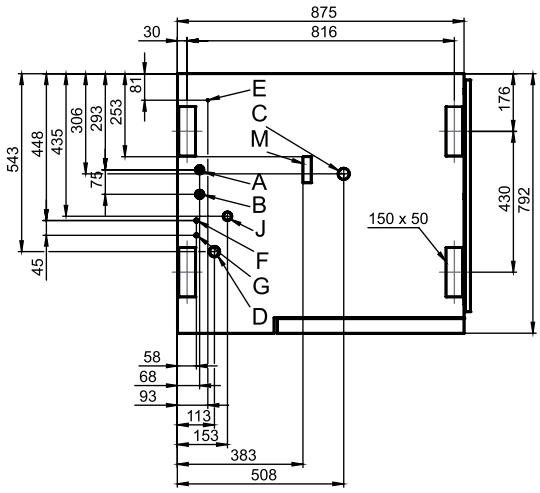

Detailed view of drain connection

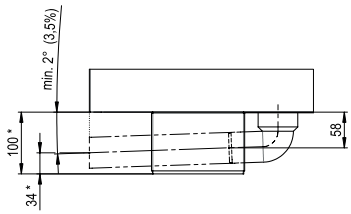

* Distance depends on how far the appliance feet are extended (max. +25 mm)

View from above with wall clearances

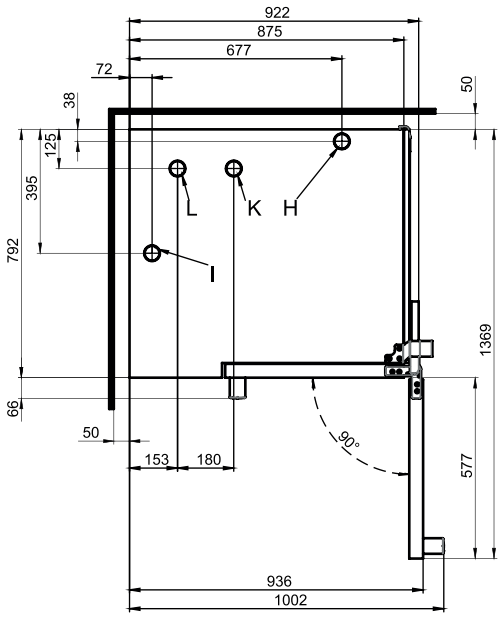

Meaning of labelled elements

A	Water connection Soft water G 3/4"
B	Water connection Hard water G 3/4"
C	Drain connection DN 50
D	Electrical connection
E	Equipotential bonding
F	Rinse-aid connection (optional)
G	Cleaning-agent connection (optional)
H	Air vent ∅ 50 mm
I	Ventilation port ∅ 50 mm
J	Gas connection
K	Exhaust outlet for convection burner ∅ 50 mm
L	Exhaust outlet for boiler burner ∅ 50 mm
M	Safety overflow 80 x 25 mm

10.2.2 Convotherm 4 6.10 injection gas appliance

Dimensions and connection points for C4 6.10 (right-hinged appliance door)

Front view

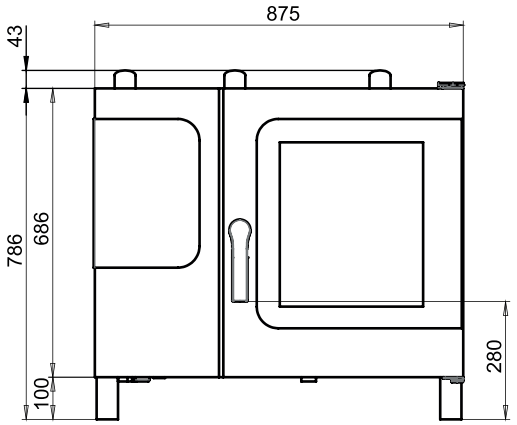

Connection points in appliance floor

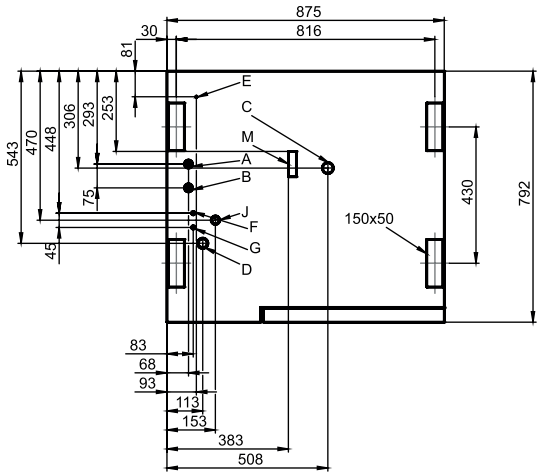

Detailed view of drain connection

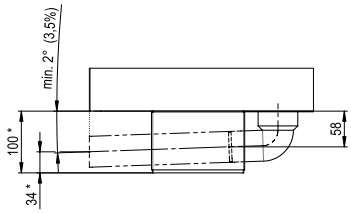

* Distance depends on how far the appliance feet are extended (max. +25 mm)

View from above with wall clearances

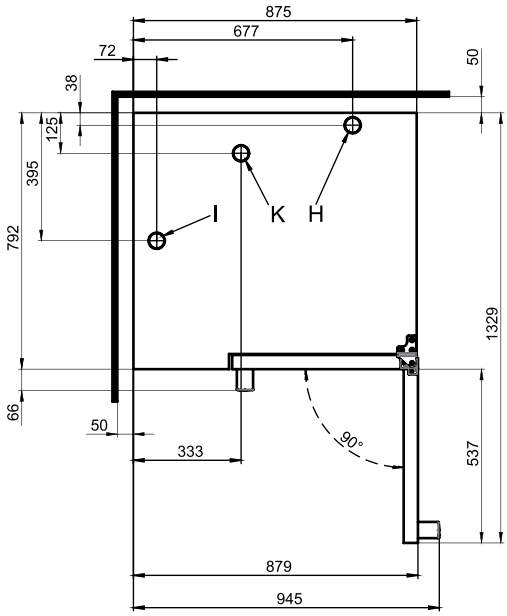

Meaning of labelled elements

A	Water connection Soft water G 3/4"
B	Water connection Hard water G 3/4"
C	Drain connection DN 50
D	Electrical connection
E	Equipotential bonding
F	Rinse-aid connection (optional)
G	Cleaning-agent connection (optional)
H	Air vent ∅ 50 mm
I	Ventilation port ∅ 50 mm
J	Gas connection
K	Exhaust outlet ∅ 50 mm
M	Safety overflow 80 x 25 mm

Dimensions and connection points for C4 6.10 (disappearing door)

Front view

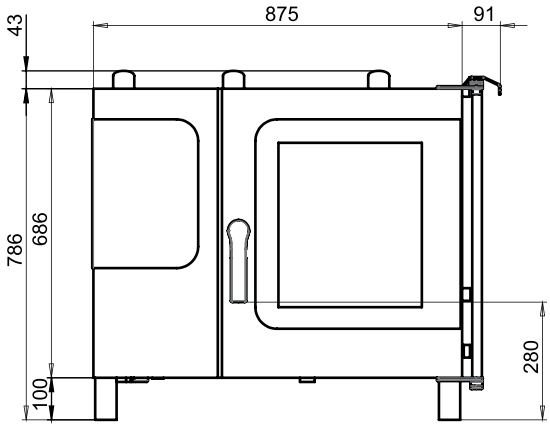

Connection points in appliance floor

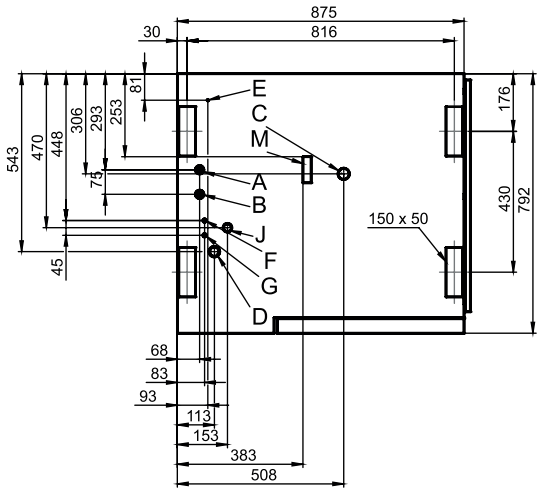

Detailed view of drain connection

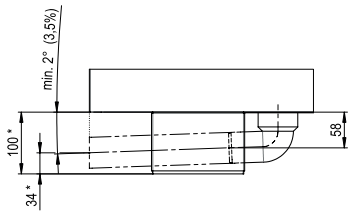

* Distance depends on how far the appliance feet are extended (max. +25 mm)

View from above with wall clearances

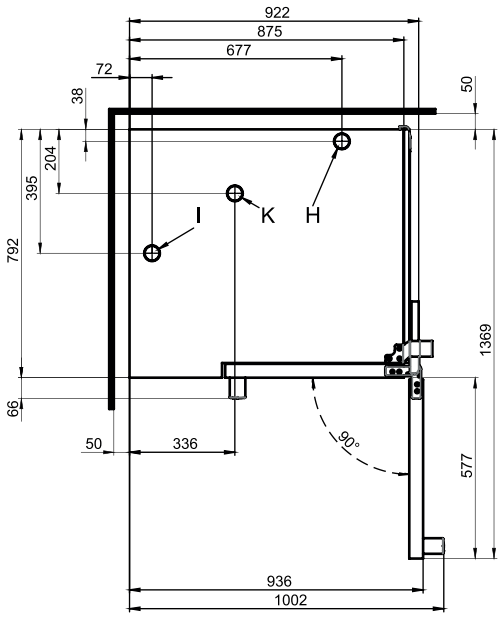

Meaning of labelled elements

A	Water connection Soft water G 3/4"
B	Water connection Hard water G 3/4"
C	Drain connection DN 50
D	Electrical connection
E	Equipotential bonding
F	Rinse-aid connection (optional)
G	Cleaning-agent connection (optional)
H	Air vent ∅ 50 mm
I	Ventilation port ∅ 50 mm
J	Gas connection
K	Exhaust outlet ∅ 50 mm
M	Safety overflow 80 x 25 mm

10.2.3 Convotherm 4 6.20 boiler gas appliance

Dimensions and connection points for C4 6.20 (right-hinged appliance door)

Front view

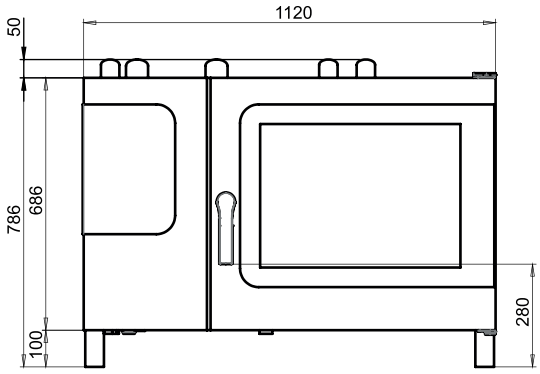

Connection points in appliance floor

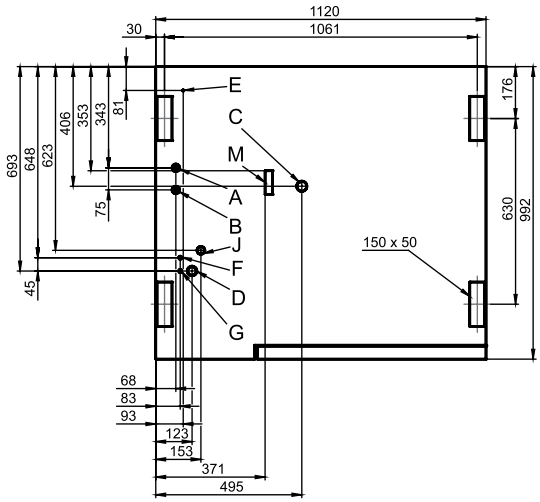

Detailed view of drain connection

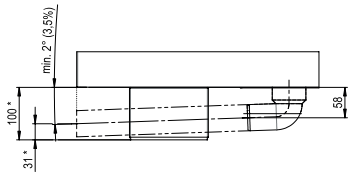

* Distance depends on how far the appliance feet are extended (max. +25 mm)

View from above with wall clearances

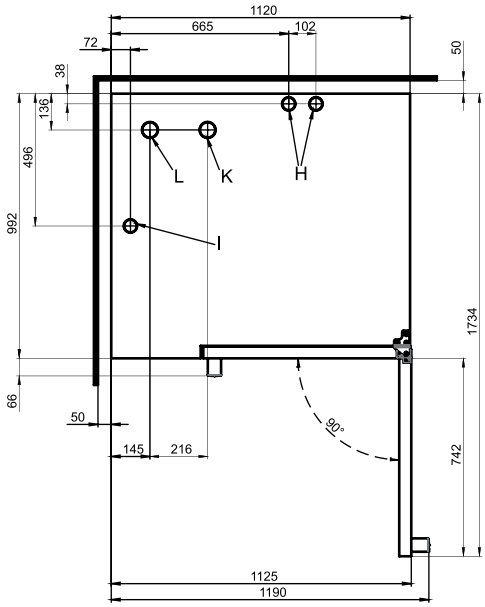

Meaning of labelled elements

- A Water connection Soft water G 3/4"
- B Water connection Hard water G 3/4"
- C Drain connection DN 50
- D Electrical connection
- E Equipotential bonding
- F Rinse-aid connection (optional)
- G Cleaning-agent connection (optional)
- H Air vent ∅ 50 mm
- I Ventilation port ∅ 50 mm
- J Gas connection
- K Exhaust outlet for convection burner ∅ 50 mm
- L Exhaust outlet for boiler burner ∅ 50 mm
- M Safety overflow 80 x 25 mm

Dimensions and connection points for C4 6.20 (disappearing door)

Front view

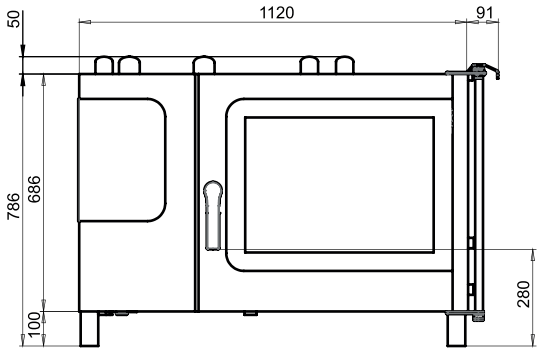

Connection points in appliance floor

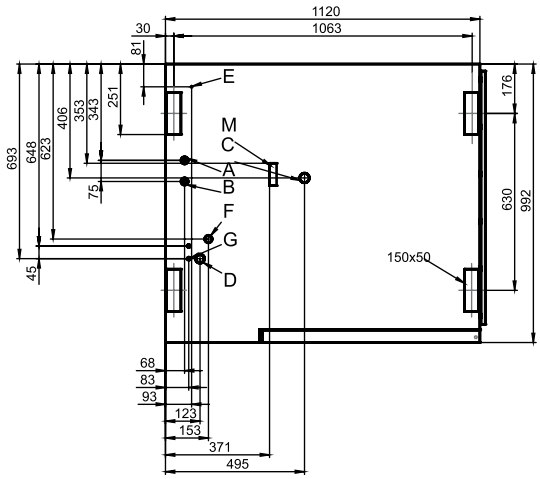

Detailed view of drain connection

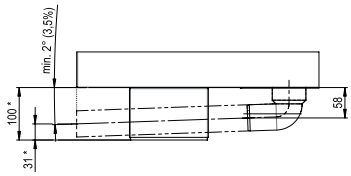

* Distance depends on how far the appliance feet are extended (max. +25 mm)

View from above with wall clearances

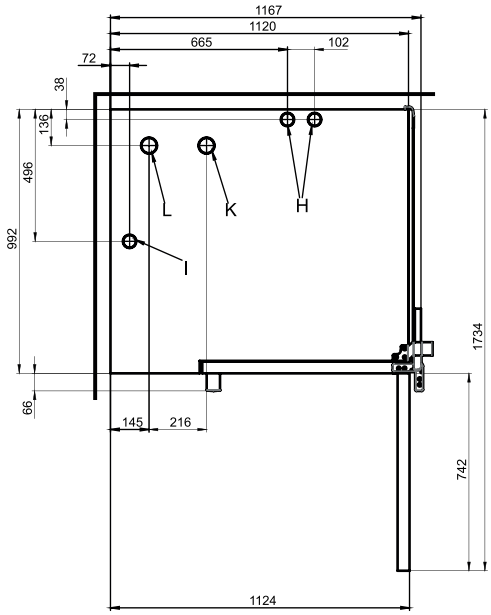

Meaning of labelled elements

A	Water connection Soft water G 3/4"
B	Water connection Hard water G 3/4"
C	Drain connection DN 50
D	Electrical connection
E	Equipotential bonding
F	Rinse-aid connection (optional)
G	Cleaning-agent connection (optional)
H	Air vent ∅ 50 mm
I	Ventilation port ∅ 50 mm
J	Gas connection
K	Exhaust outlet for convection burner ∅ 50 mm
L	Exhaust outlet for boiler burner ∅ 50 mm
M	Safety overflow 80 x 25 mm

10.2.4 Convotherm 4 6.20 injection gas appliance

Dimensions and connection points for C4 6.20 (right-hinged appliance door)

Front view

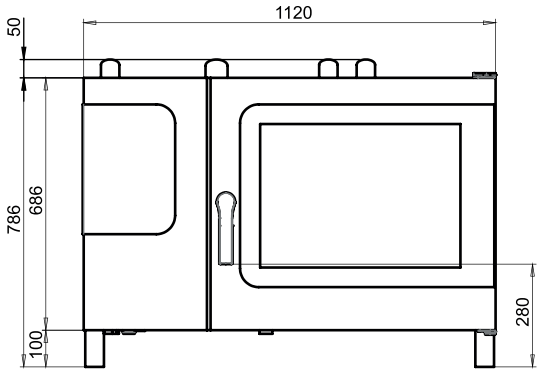

Connection points in appliance floor

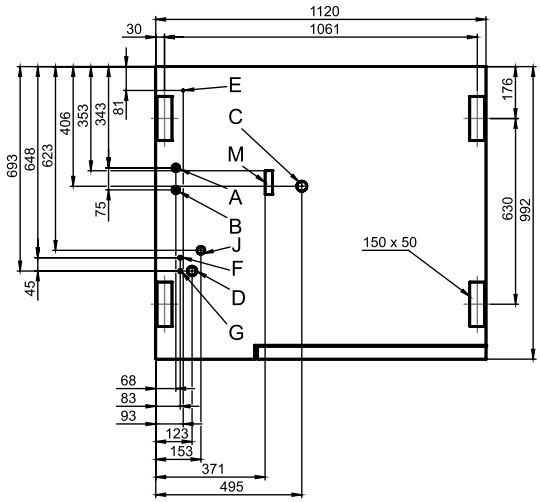

Detailed view of drain connection

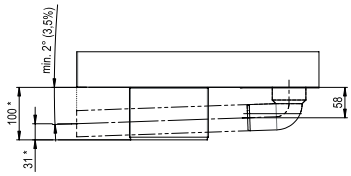

* Distance depends on how far the appliance feet are extended (max. +25 mm)

View from above with wall clearances

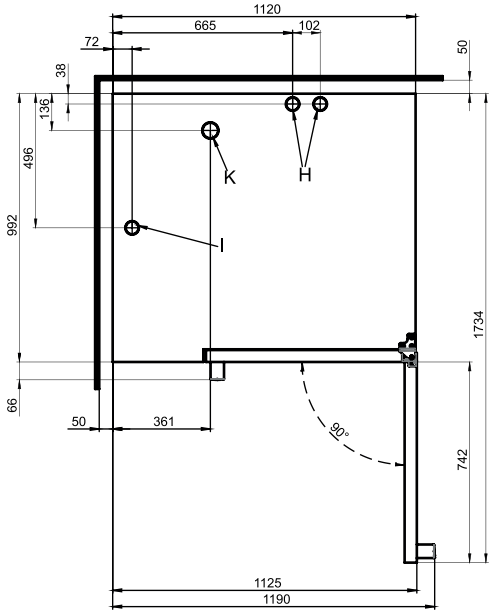

Meaning of labelled elements

A	Water connection Soft water G 3/4"
B	Water connection Hard water G 3/4"
C	Drain connection DN 50
D	Electrical connection
E	Equipotential bonding
F	Rinse-aid connection (optional)
G	Cleaning-agent connection (optional)
H	Air vent ∅ 50 mm
I	Ventilation port ∅ 50 mm
J	Gas connection
K	Exhaust outlet ∅ 50 mm
M	Safety overflow 80 x 25 mm

Dimensions and connection points for C4 6.20 (disappearing door)

Front view

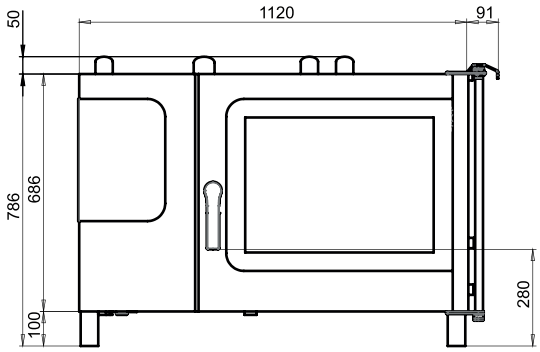

Connection points in appliance floor

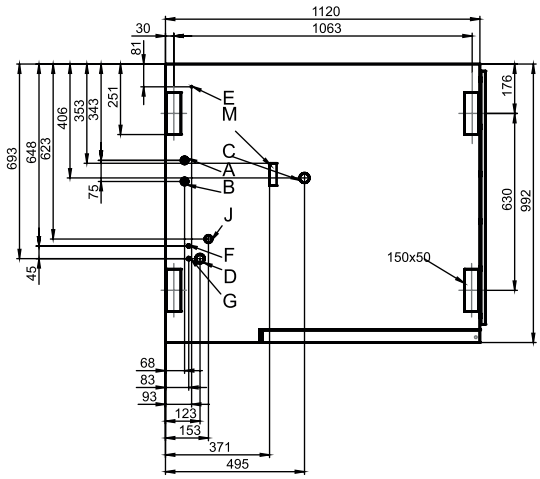

Detailed view of drain connection

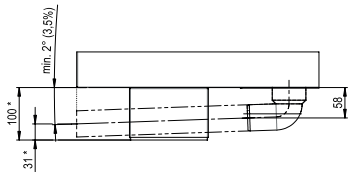

* Distance depends on how far the appliance feet are extended (max. +25 mm)

View from above with wall clearances

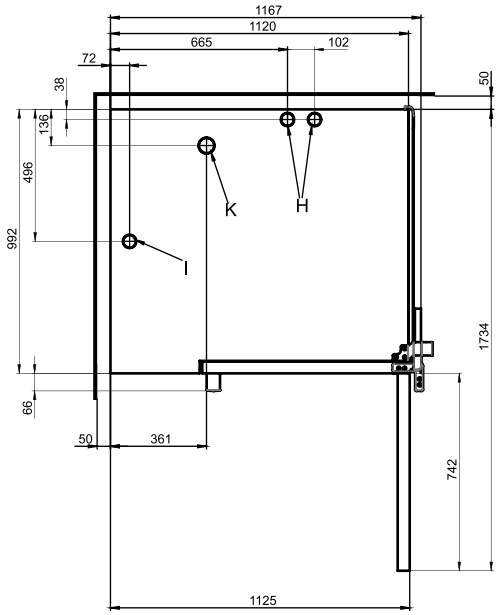

Meaning of labelled elements

A	Water connection Soft water G 3/4"
B	Water connection Hard water G 3/4"
C	Drain connection DN 50
D	Electrical connection
E	Equipotential bonding
F	Rinse-aid connection (optional)
G	Cleaning-agent connection (optional)
H	Air vent ∅ 50 mm
I	Ventilation port ∅ 50 mm
J	Gas connection
K	Exhaust outlet ∅ 50 mm
M	Safety overflow 80 x 25 mm

10.2.5 Convotherm 4 10.10 boiler gas appliance

Dimensions and connection points for C4 10.10 (right-hinged appliance door)

Front view

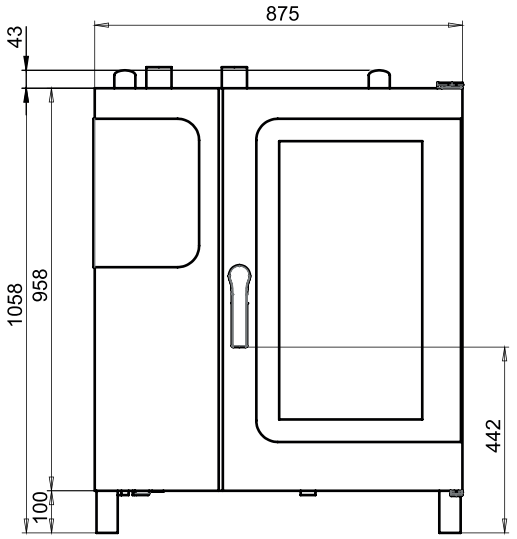

Connection points in appliance floor

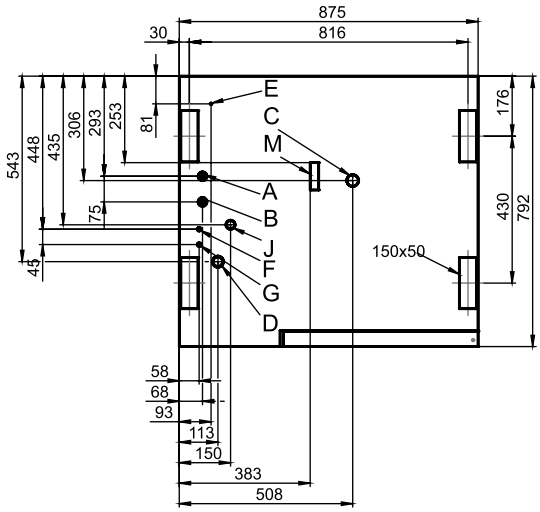

Detailed view of drain connection

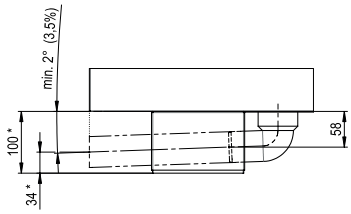

* Distance depends on how far the appliance feet are extended (max. +25 mm)

View from above with wall clearances

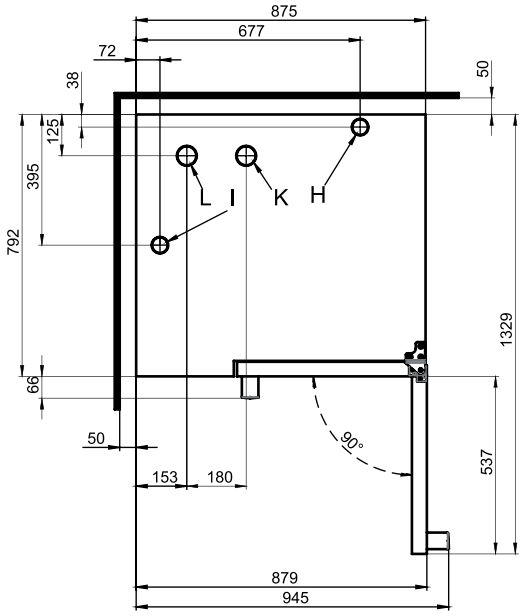

Meaning of labelled elements

A	Water connection Soft water G 3/4"
B	Water connection Hard water G 3/4"
C	Drain connection DN 50
D	Electrical connection
E	Equipotential bonding
F	Rinse-aid connection (optional)
G	Cleaning-agent connection (optional)
H	Air vent ∅ 50 mm
I	Ventilation port ∅ 50 mm
J	Gas connection
K	Exhaust outlet for convection burner ∅ 50 mm
L	Exhaust outlet for boiler burner ∅ 50 mm
M	Safety overflow 80 x 25 mm

Dimensions and connection points for C4 10.10 (disappearing door)

Front view

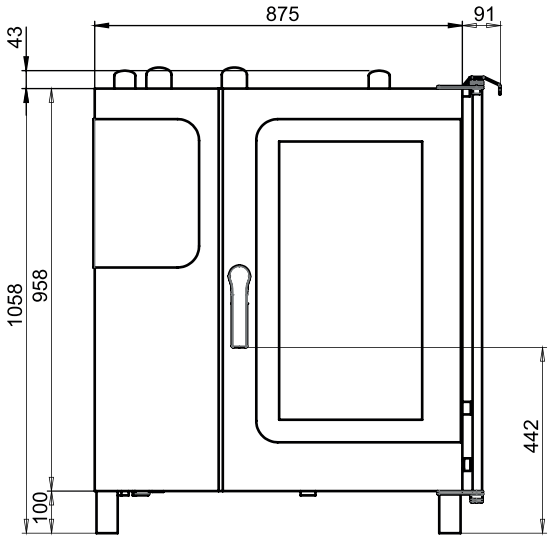

Connection points in appliance floor

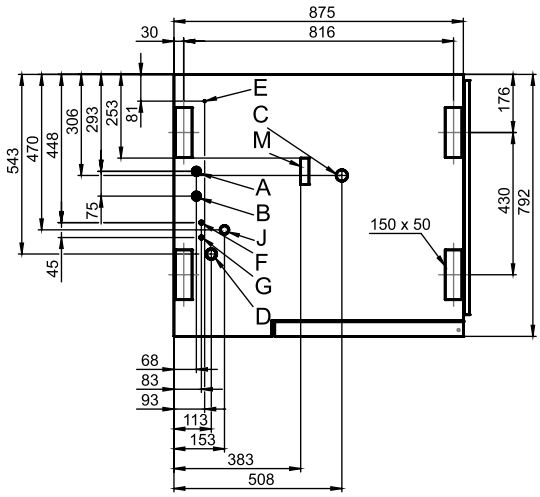

Detailed view of drain connection

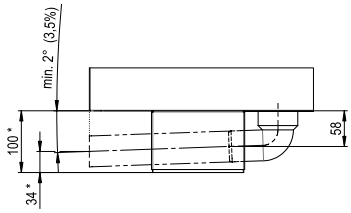

* Distance depends on how far the appliance feet are extended (max. +25 mm)

View from above with wall clearances

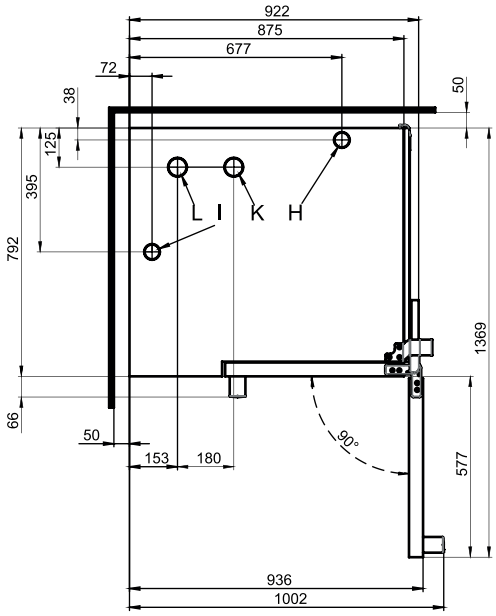

Meaning of labelled elements

A	Water connection Soft water G 3/4"
B	Water connection Hard water G 3/4"
C	Drain connection DN 50
D	Electrical connection
E	Equipotential bonding
F	Rinse-aid connection (optional)
G	Cleaning-agent connection (optional)
H	Air vent∅ 50 mm
I	Ventilation port ∅ 50 mm
J	Gas connection
K	Exhaust outlet for convection burner ∅ 50 mm
L	Exhaust outlet for boiler burner ∅ 50 mm
M	Safety overflow 80 x 25 mm

10.2.6 Convotherm 4 10.10 injection gas appliance

Dimensions and connection points for C4 10.10 (right-hinged appliance door)

Front view

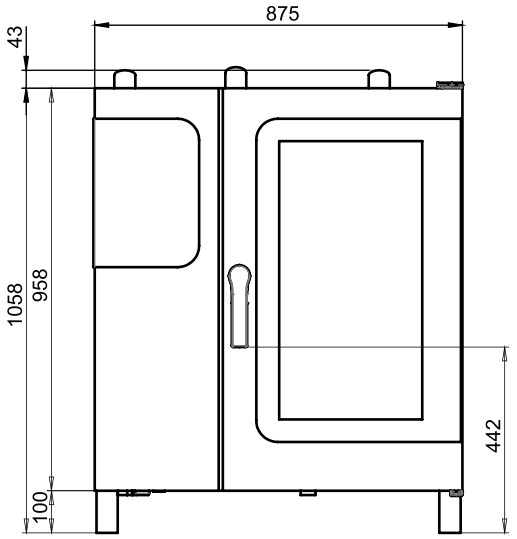

Connection points in appliance floor

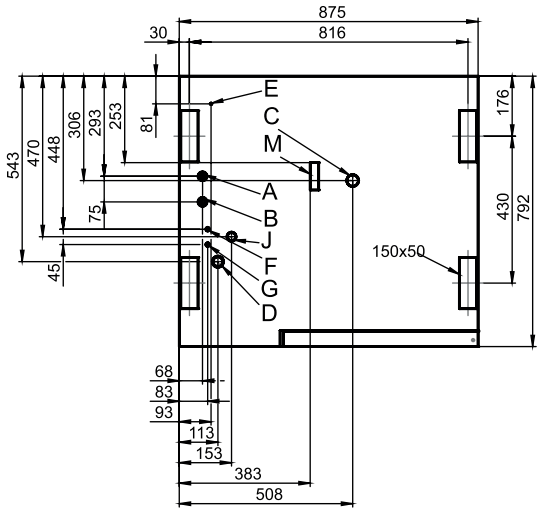

Detailed view of drain connection

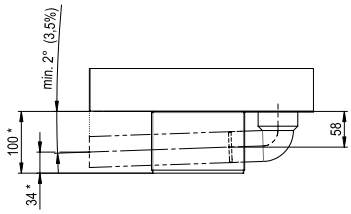

* Distance depends on how far the appliance feet are extended (max. +25 mm)

View from above with wall clearances

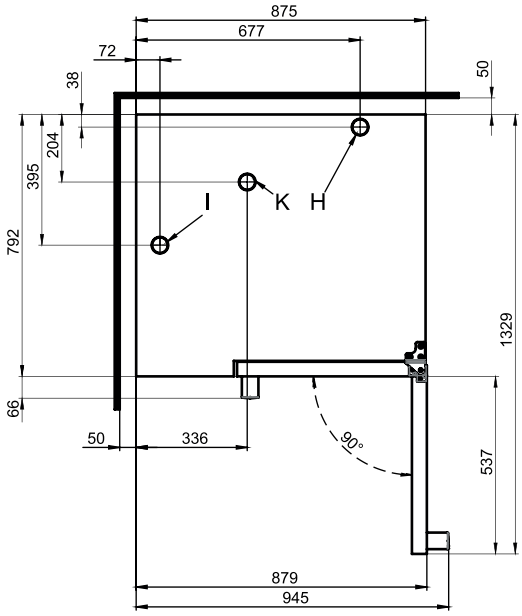

Meaning of labelled elements

A	Water connection Soft water G 3/4"
B	Water connection Hard water G 3/4"
C	Drain connection DN 50
D	Electrical connection
E	Equipotential bonding
F	Rinse-aid connection (optional)
G	Cleaning-agent connection (optional)
H	Air vent ∅ 50 mm
I	Ventilation port ∅ 50 mm
J	Gas connection
K	Exhaust outlet ∅ 50 mm
M	Safety overflow 80 x 25 mm

Dimensions and connection points for C4 10.10 (disappearing door)

Front view

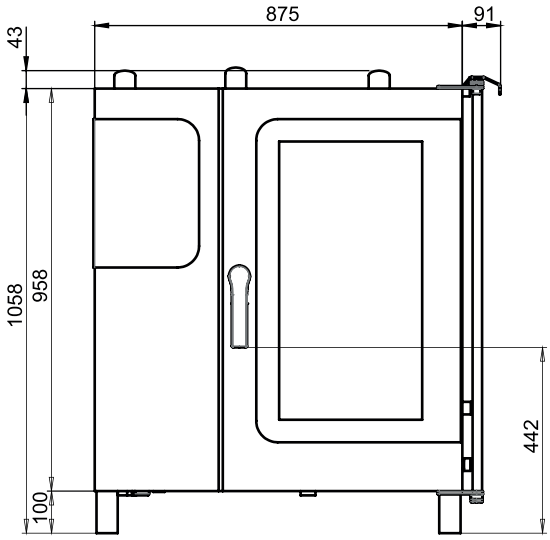

Connection points in appliance floor

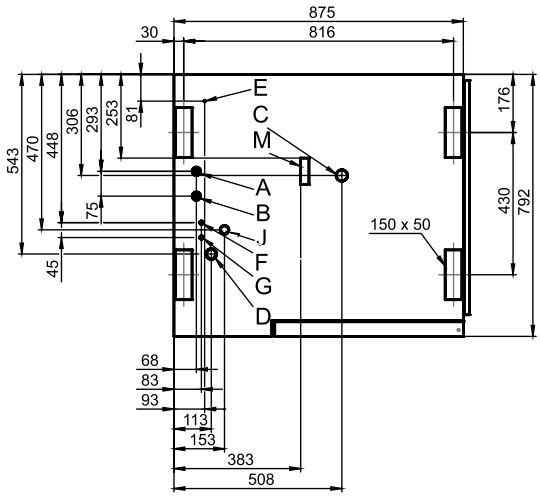

Detailed view of drain connection

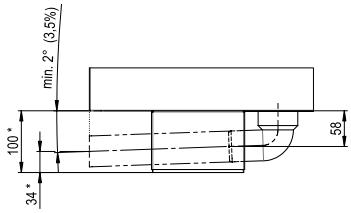

* Distance depends on how far the appliance feet are extended (max. +25 mm)

View from above with wall clearances

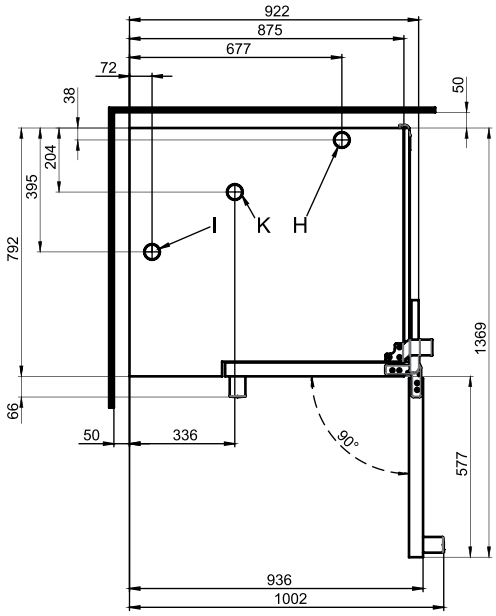

Meaning of labelled elements

A	Water connection Soft water G 3/4"
B	Water connection Hard water G 3/4"
C	Drain connection DN 50
D	Electrical connection
E	Equipotential bonding
F	Rinse-aid connection (optional)
G	Cleaning-agent connection (optional)
H	Air vent ∅ 50 mm
I	Ventilation port ∅ 50 mm
J	Gas connection
K	Exhaust outlet ∅ 50 mm
M	Safety overflow 80 x 25 mm

10.2.7 Convotherm 4 10.20 boiler gas appliance

Dimensions and connection points for C4 10.20 (right-hinged appliance door)

Front view

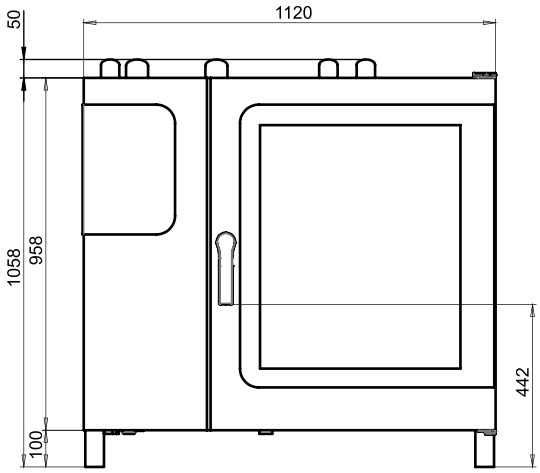

Connection points in appliance floor

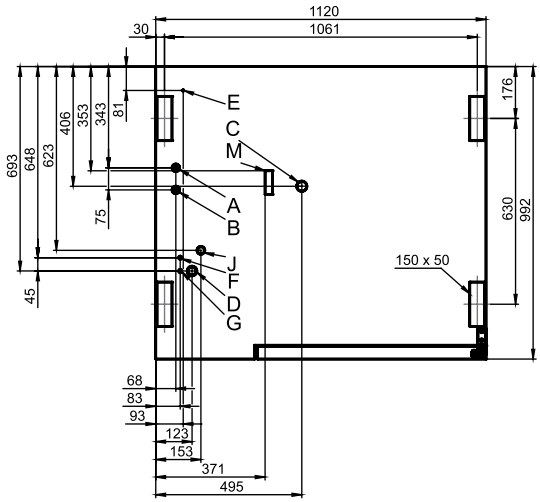

Detailed view of drain connection

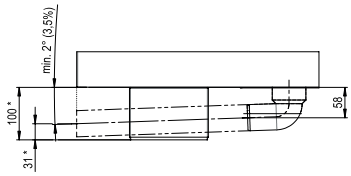

* Distance depends on how far the appliance feet are extended (max. +25 mm)

View from above with wall clearances

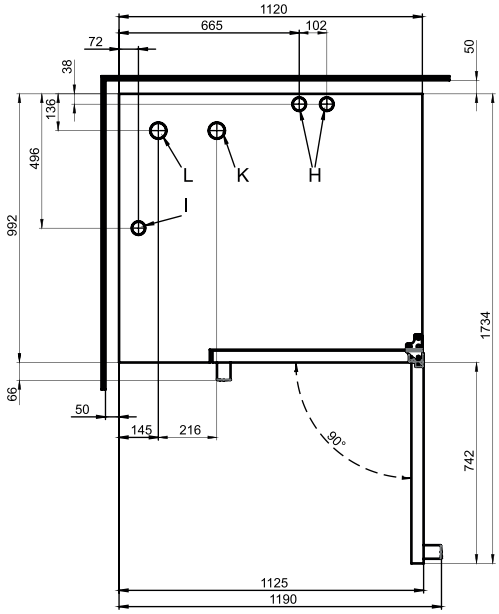

Meaning of labelled elements

A	Water connection Soft water G 3/4"
B	Water connection Hard water G 3/4"
C	Drain connection DN 50
D	Electrical connection
E	Equipotential bonding
F	Rinse-aid connection (optional)
G	Cleaning-agent connection (optional)
H	Air vent ∅ 50 mm
I	Ventilation port ∅ 50 mm
J	Gas connection
K	Exhaust outlet for convection burner ∅ 60.3 mm
L	Exhaust outlet for boiler burner ∅ 60 mm
M	Safety overflow 80 x 25 mm

Dimensions and connection points for C4 10.20 (disappearing door)

Front view

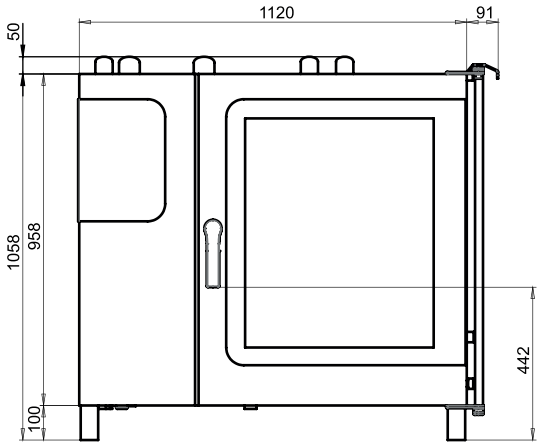

Connection points in appliance floor

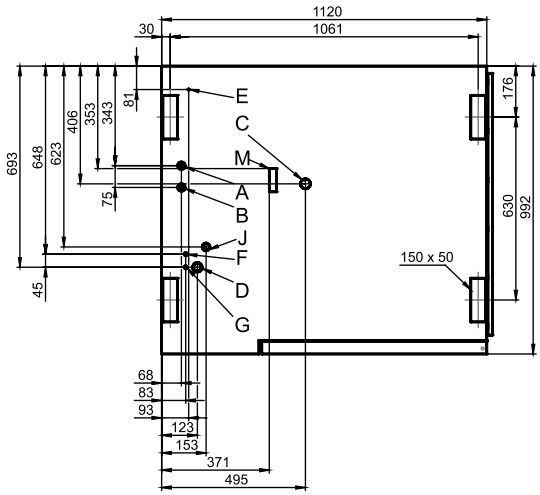

Detailed view of drain connection

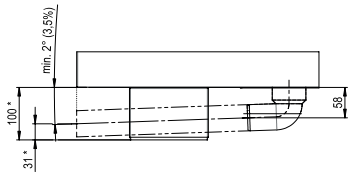

* Distance depends on how far the appliance feet are extended (max. +25 mm)

View from above with wall clearances

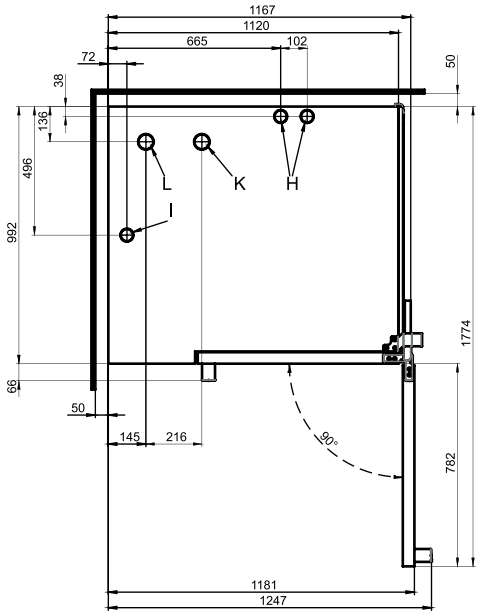

Meaning of labelled elements

- A Water connection Soft water G 3/4"
- B Water connection Hard water G 3/4"
- C Drain connection DN 50
- D Electrical connection
- E Equipotential bonding
- F Rinse-aid connection (optional)
- G Cleaning-agent connection (optional)
- H Air vent ∅ 50 mm
- I Ventilation port ∅ 50 mm
- J Gas connection
- K Exhaust outlet for convection burner ∅ 60.3 mm
- L Exhaust outlet for boiler burner ∅ 60 mm
- M Safety overflow 80 x 25 mm

10.2.8 Convotherm 4 10.20 injection gas appliance

Dimensions and connection points for C4 10.20 (right-hinged appliance door)

Front view

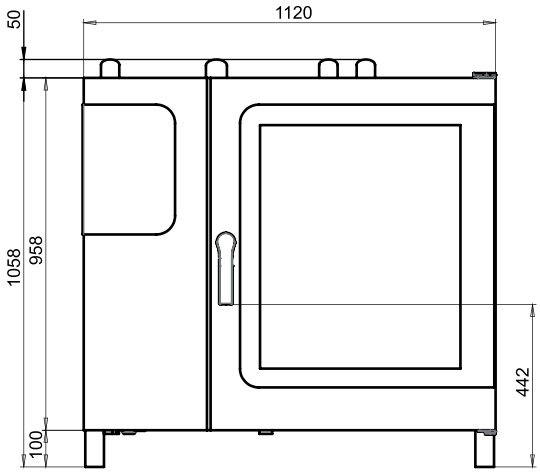

Connection points in appliance floor

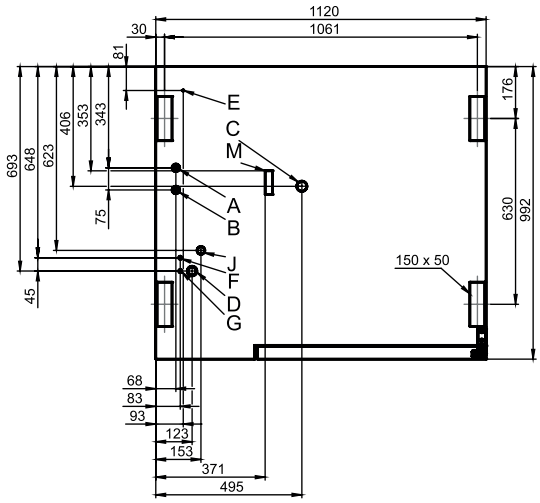

Detailed view of drain connection

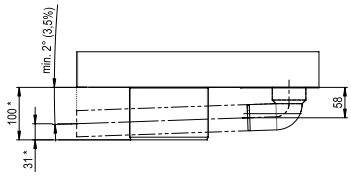

* Distance depends on how far the appliance feet are extended (max. +25 mm)

View from above with wall clearances

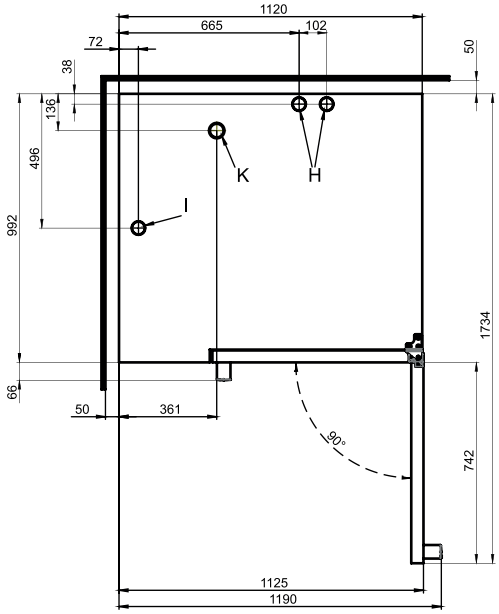

Meaning of labelled elements

A	Water connection Soft water G 3/4"
B	Water connection Hard water G 3/4"
C	Drain connection DN 50
D	Electrical connection
E	Equipotential bonding
F	Rinse-aid connection (optional)
G	Cleaning-agent connection (optional)
H	Air vent ∅ 50 mm
I	Ventilation port ∅ 50 mm
J	Gas connection
K	Exhaust outlet ∅ 50 mm
M	Safety overflow 80 x 25 mm

Dimensions and connection points for C4 10.20 (disappearing door)

Front view

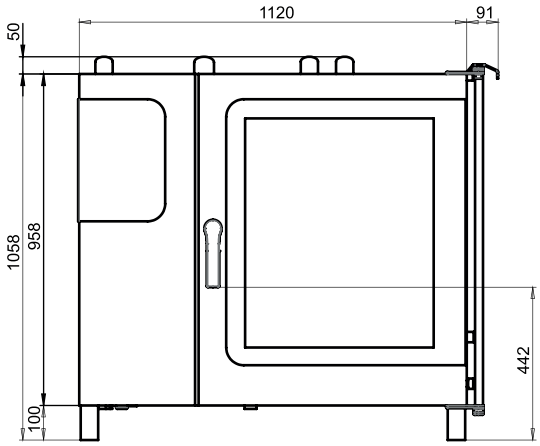

Connection points in appliance floor

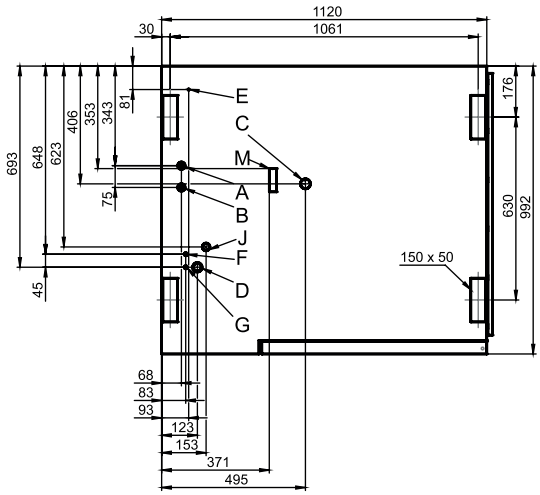

Detailed view of drain connection

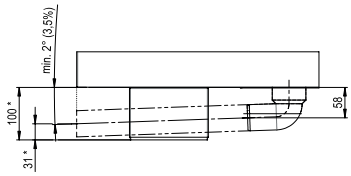

* Distance depends on how far the appliance feet are extended (max. +25 mm)

View from above with wall clearances

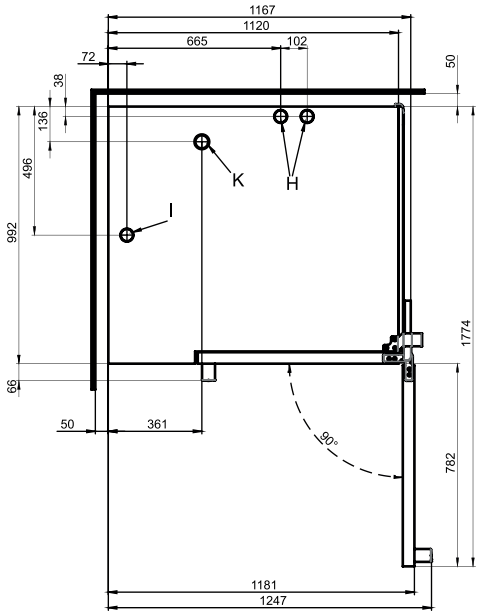

Meaning of labelled elements

A	Water connection Soft water G 3/4"
B	Water connection Hard water G 3/4"
C	Drain connection DN 50
D	Electrical connection
E	Equipotential bonding
F	Rinse-aid connection (optional)
G	Cleaning-agent connection (optional)
H	Air vent ∅ 50 mm
I	Ventilation port ∅ 50 mm
J	Gas connection
K	Exhaust outlet ∅ 50 mm
M	Safety overflow 80 x 25 mm

10.2.9 Convotherm 4 12.20 boiler gas appliance

Dimensions and connection points for C4 12.20 (right-hinged appliance door)

Front view

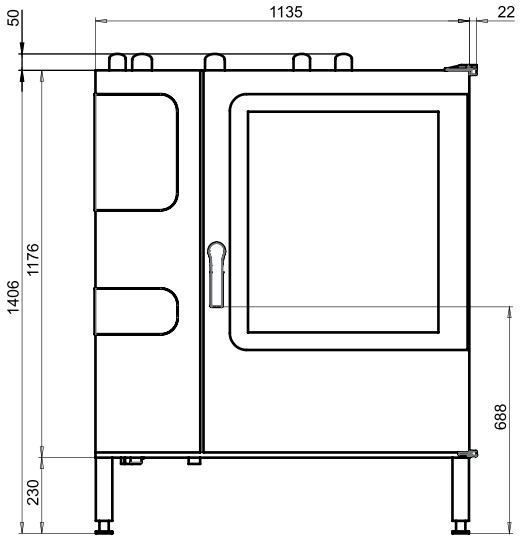

Connection points in appliance floor

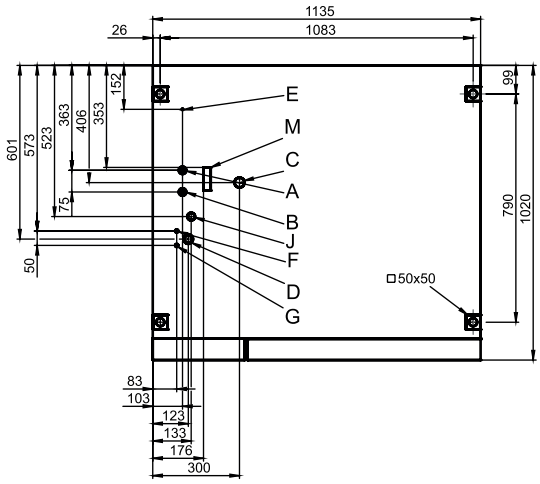

Detailed view of drain connection

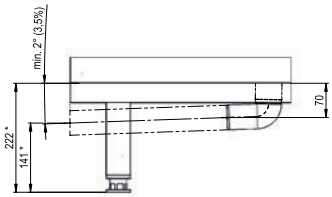

* Distance depends on how far the appliance feet are extended (max. +25 mm)

View from above with wall clearances

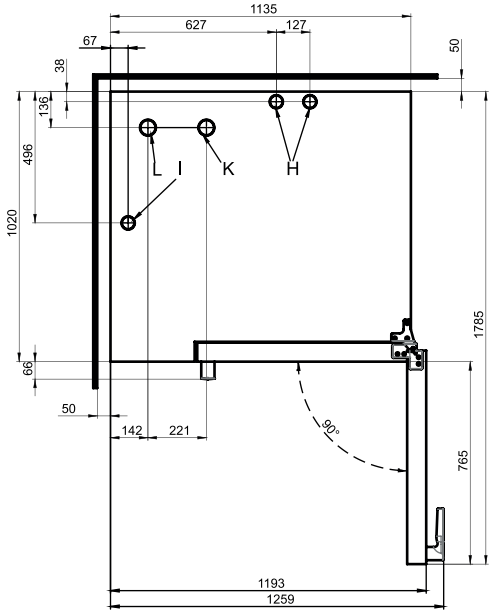

Meaning of labelled elements

A	Water connection Soft water G 3/4"
B	Water connection Hard water G 3/4"
C	Drain connection DN 50
D	Electrical connection
E	Equipotential bonding
F	Rinse-aid connection (optional)
G	Cleaning-agent connection (optional)
H	Air vent ∅ 50 mm
I	Ventilation port ∅ 50 mm
J	Gas connection
K	Exhaust outlet for convection burner ∅ 60.3 mm
L	Exhaust outlet for boiler burner ∅ 60 mm
M	Safety overflow 80 x 25 mm

Dimensions and connection points for C4 12.20 (disappearing door)

Front view

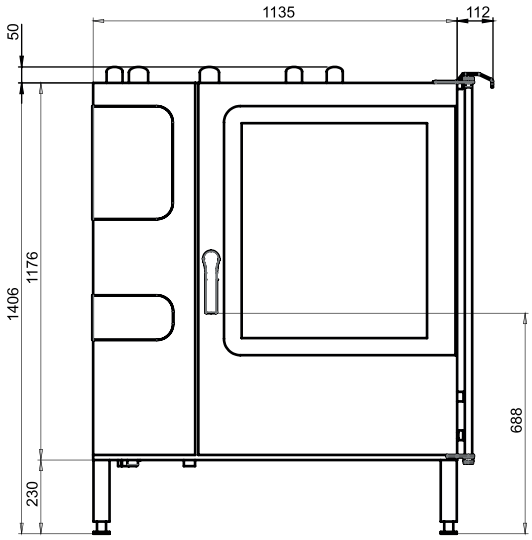

Connection points in appliance floor

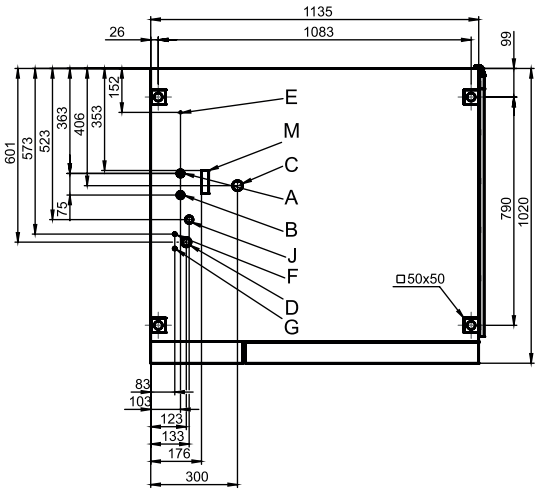

Detailed view of drain connection

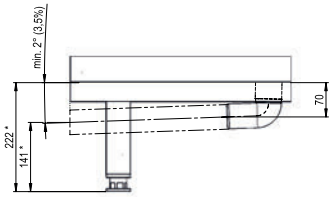

* Distance depends on how far the appliance feet are extended (max. +25 mm)

View from above with wall clearances

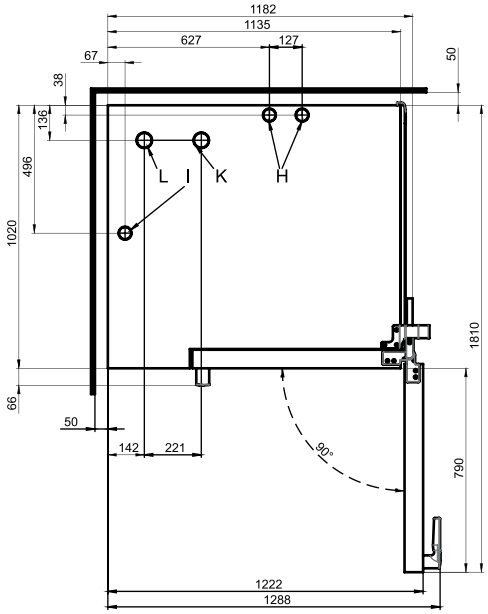

Meaning of labelled elements

A	Water connection Soft water G 3/4"
B	Water connection Hard water G 3/4"
C	Drain connection DN 50
D	Electrical connection
E	Equipotential bonding
F	Rinse-aid connection (optional)
G	Cleaning-agent connection (optional)
H	Air vent ∅ 50 mm
I	Ventilation port ∅ 50 mm
J	Gas connection
K	Exhaust outlet for convection burner ∅ 60.3 mm
L	Exhaust outlet for boiler burner ∅ 60 mm
M	Safety overflow 80 x 25 mm

10.2.10 Convotherm 4 12.20 injection gas appliance

Dimensions and connection points for C4 12.20 (right-hinged appliance door)

Front view

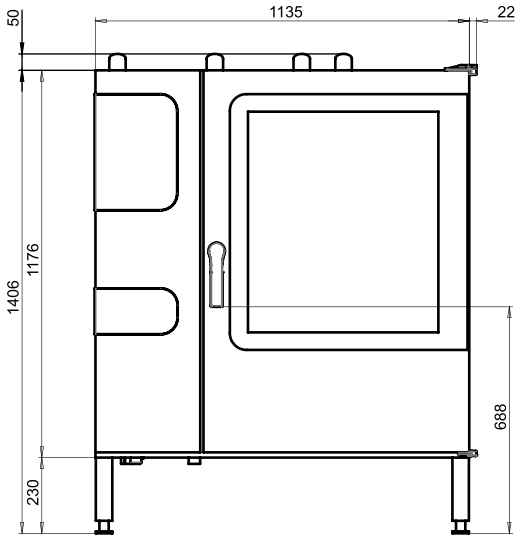

Connection points in appliance floor

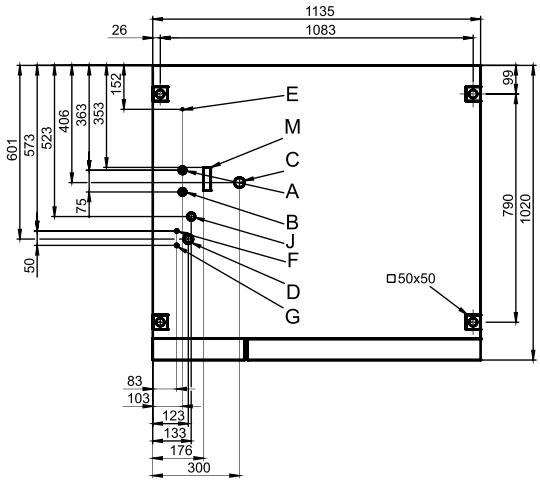

Detailed view of drain connection

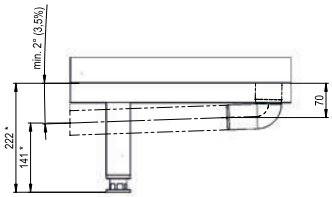

* Distance depends on how far the appliance feet are extended (max. +25 mm)

View from above with wall clearances

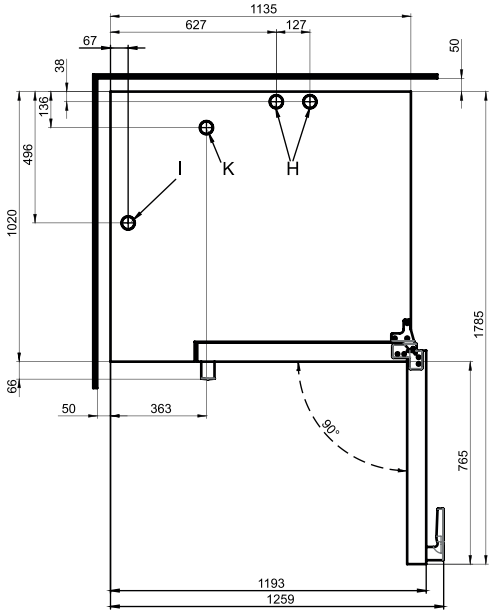

Meaning of labelled elements

A	Water connection Soft water G 3/4"
B	Water connection Hard water G 3/4"
C	Drain connection DN 50
D	Electrical connection
E	Equipotential bonding
F	Rinse-aid connection (optional)
G	Cleaning-agent connection (optional)
H	Air vent ∅ 50 mm
I	Ventilation port ∅ 50 mm
J	Gas connection
K	Exhaust outlet ∅ 60.3 mm
M	Safety overflow 80 x 25 mm

Dimensions and connection points for C4 12.20 (disappearing door)

Front view

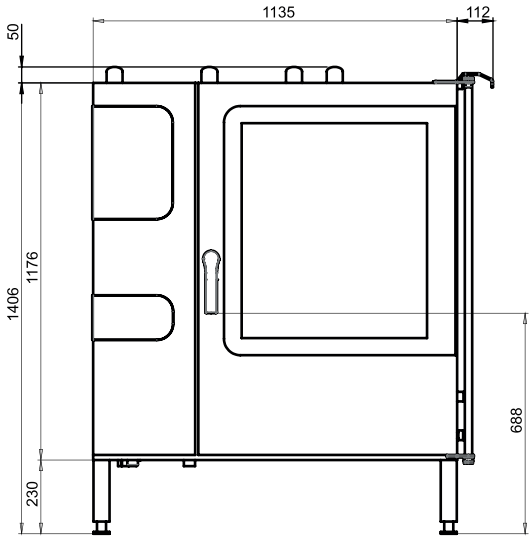

Connection points in appliance floor

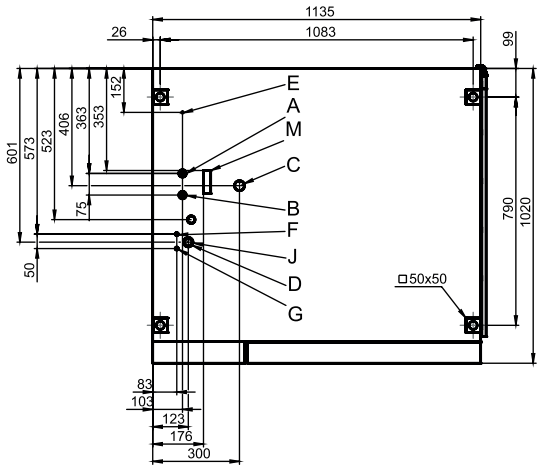

Detailed view of drain connection

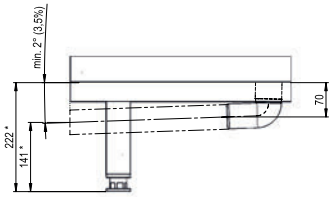

* Distance depends on how far the appliance feet are extended (max. +25 mm)

View from above with wall clearances

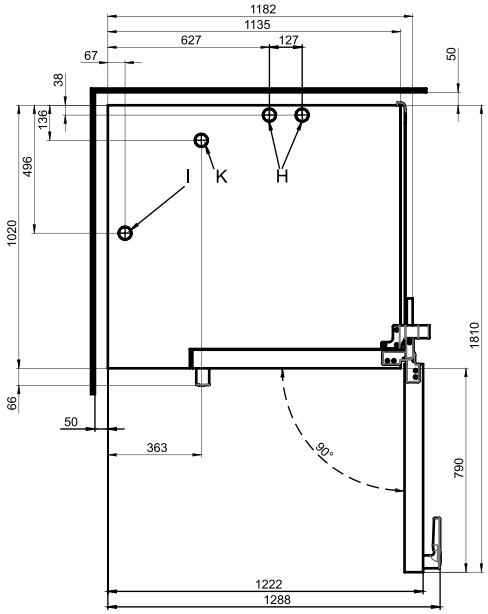

Meaning of labelled elements

A	Water connection Soft water G 3/4"
B	Water connection Hard water G 3/4"
C	Drain connection DN 50
D	Electrical connection
E	Equipotential bonding
F	Rinse-aid connection (optional)
G	Cleaning-agent connection (optional)
H	Air vent ∅ 50 mm
I	Ventilation port ∅ 50 mm
J	Gas connection
K	Exhaust outlet ∅ 60.3 mm
M	Safety overflow 80 x 25 mm

10.2.11 Convotherm 4 20.10 boiler gas appliance

Dimensions and connection points for C4 20.10 (right-hinged appliance door)

Front view

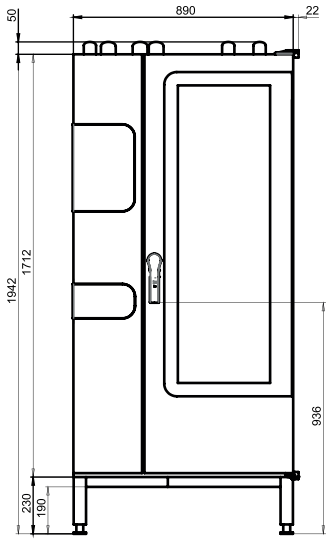

Connection points in appliance floor

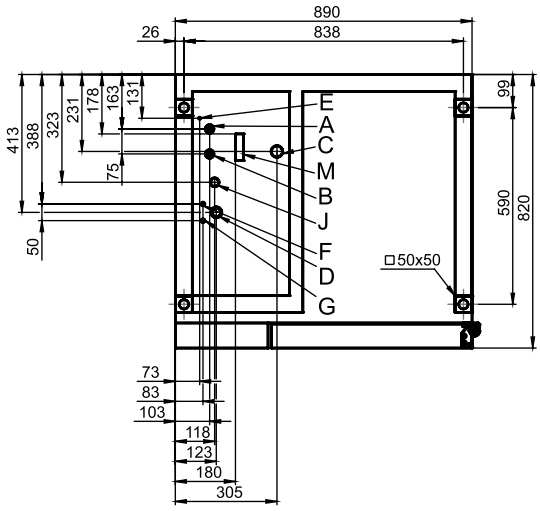

Detailed view of drain connection

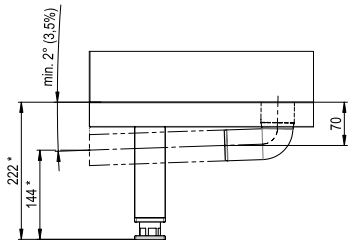

* Distance depends on how far the appliance feet are extended (max. +25 mm)

View from above with wall clearances

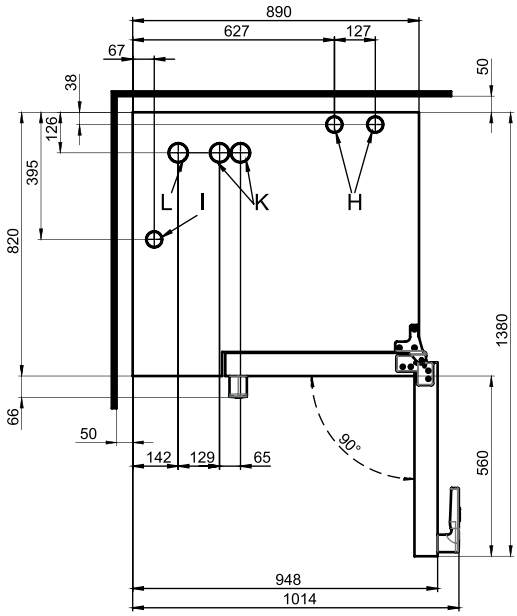

Meaning of labelled elements

A	Water connection Soft water G 3/4"
B	Water connection Hard water G 3/4"
C	Drain connection DN 50
D	Electrical connection
E	Equipotential bonding
F	Rinse-aid connection (optional)
G	Cleaning-agent connection (optional)
H	Air vent ∅ 50 mm
I	Ventilation port ∅ 50 mm
J	Gas connection
K	Exhaust outlet for convection burner ∅ 50 mm
L	Exhaust outlet for boiler burner ∅ 60.3 mm
M	Safety overflow 80 x 25 mm

Dimensions and connection points for C4 20.10 (disappearing door)

Front view

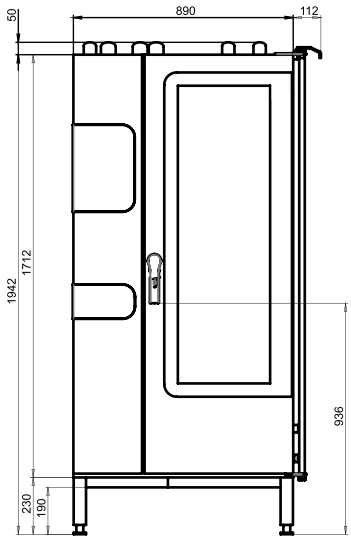

Connection points in appliance floor

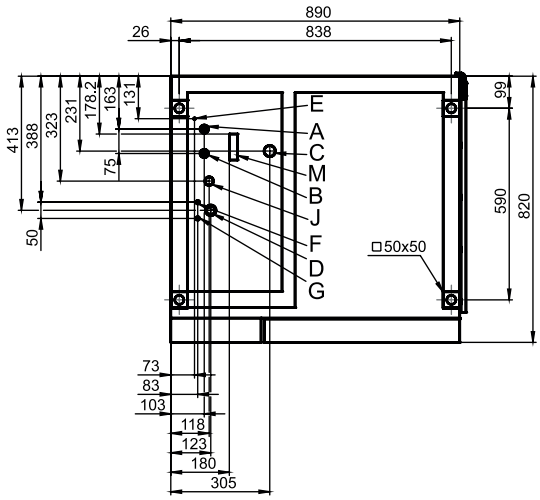

Detailed view of drain connection

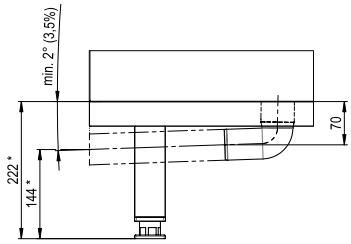

* Distance depends on how far the appliance feet are extended (max. +25 mm)

View from above with wall clearances

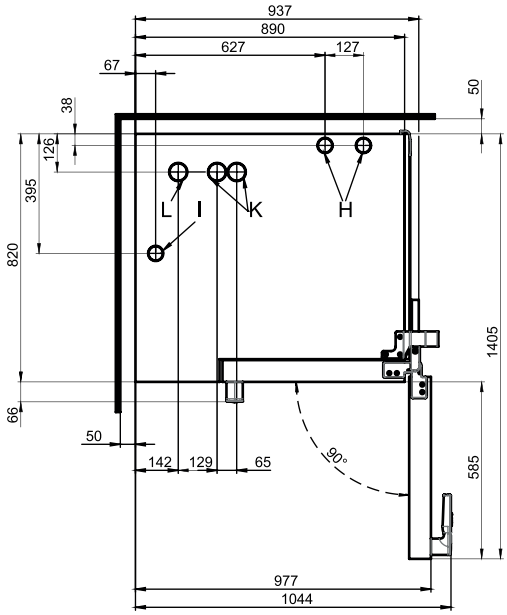

Meaning of labelled elements

A	Water connection Soft water G 3/4"
B	Water connection Hard water G 3/4"
C	Drain connection DN 50
D	Electrical connection
E	Equipotential bonding
F	Rinse-aid connection (optional)
G	Cleaning-agent connection (optional)
H	Air vent ∅ 50 mm
I	Ventilation port ∅ 50 mm
J	Gas connection
K	Exhaust outlet for convection burner ∅ 50 mm
L	Exhaust outlet for boiler burner ∅ 60.3 mm
M	Safety overflow 80 x 25 mm

10.2.12 Convotherm 4 20.10 injection gas appliance

Dimensions and connection points for C4 20.10 (right-hinged appliance door)

Front view

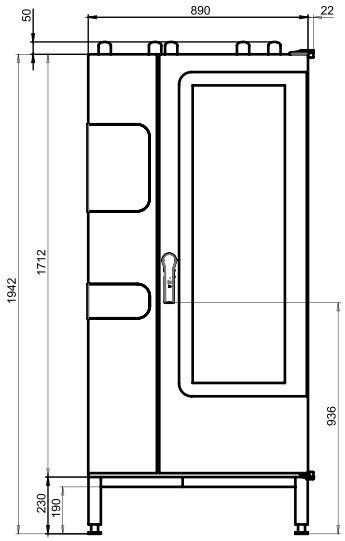

Connection points in appliance floor

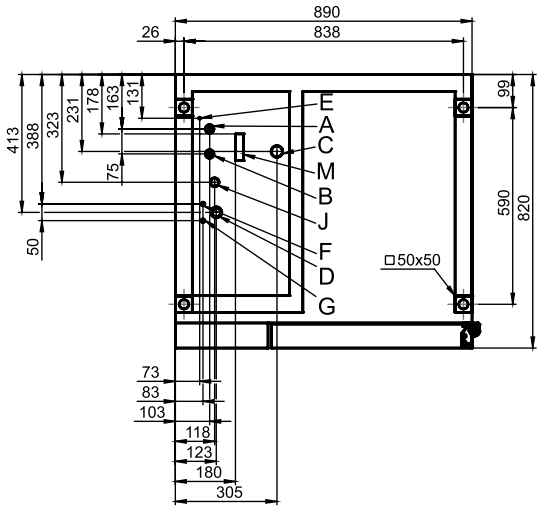

Detailed view of drain connection

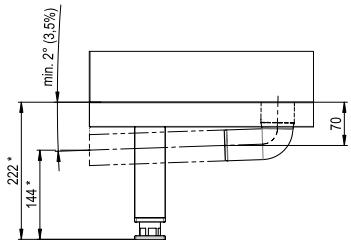

* Distance depends on how far the appliance feet are extended (max. +25 mm)

View from above with wall clearances

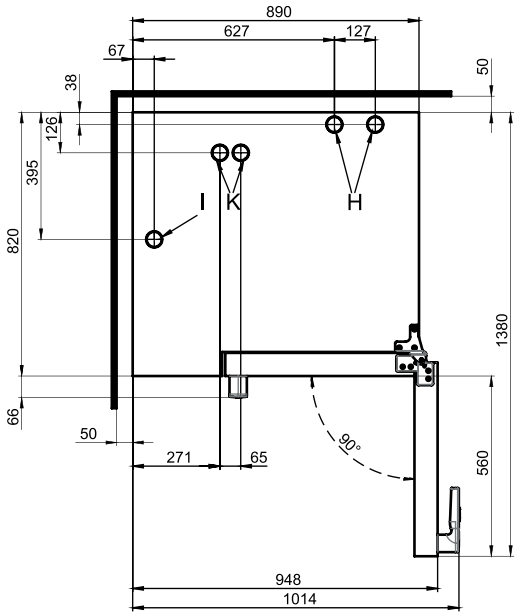

Meaning of labelled elements

A	Water connection Soft water G 3/4"
B	Water connection Hard water G 3/4"
C	Drain connection DN 50
D	Electrical connection
E	Equipotential bonding
F	Rinse-aid connection (optional)
G	Cleaning-agent connection (optional)
H	Air vent ∅ 50 mm
I	Ventilation port ∅ 50 mm
J	Gas connection
K	Exhaust outlet ∅ 50 mm
M	Safety overflow 80 x 25 mm

Dimensions and connection points for C4 20.10 (disappearing door)

Front view

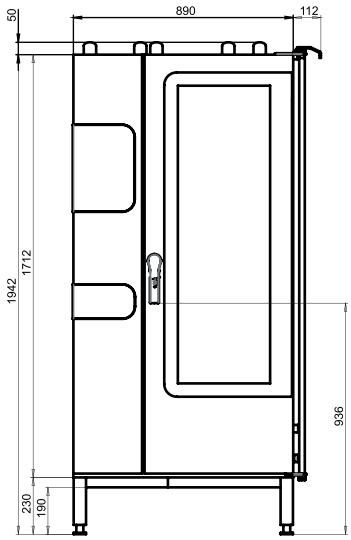

Connection points in appliance floor

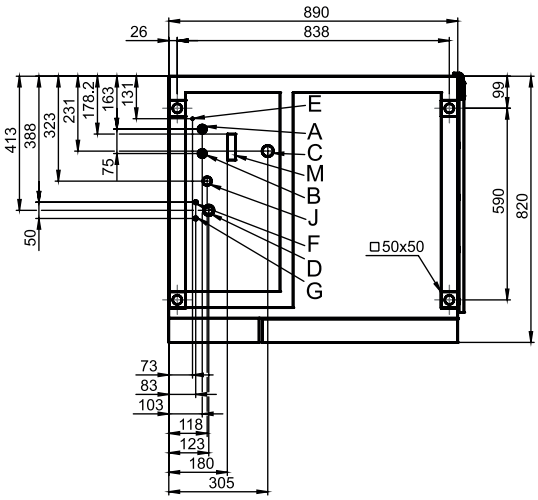

Detailed view of drain connection

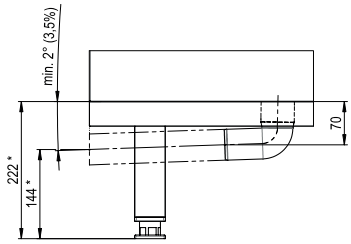

* Distance depends on how far the appliance feet are extended (max. +25 mm)

View from above with wall clearances

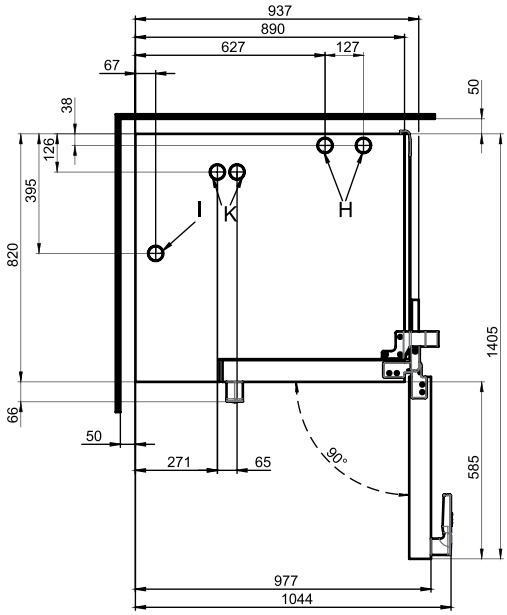

Meaning of labelled elements

A	Water connection Soft water G 3/4"
B	Water connection Hard water G 3/4"
C	Drain connection DN 50
D	Electrical connection
E	Equipotential bonding
F	Rinse-aid connection (optional)
G	Cleaning-agent connection (optional)
H	Air vent ∅ 50 mm
I	Ventilation port ∅ 50 mm
J	Gas connection
K	Exhaust outlet ∅ 50 mm
M	Safety overflow 80 x 25 mm

10.2.13 Convotherm 4 20.20 boiler gas appliance

Dimensions and connection points for C4 20.20 (right-hinged appliance door)

Front view

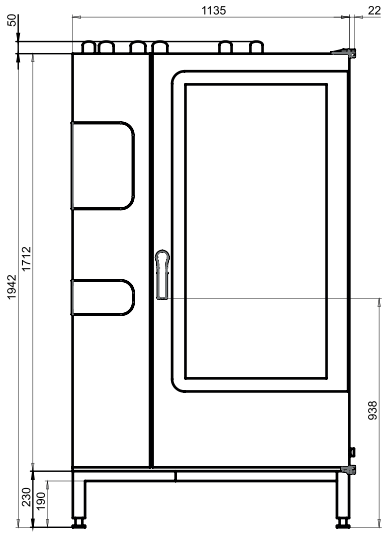

Connection points in appliance floor

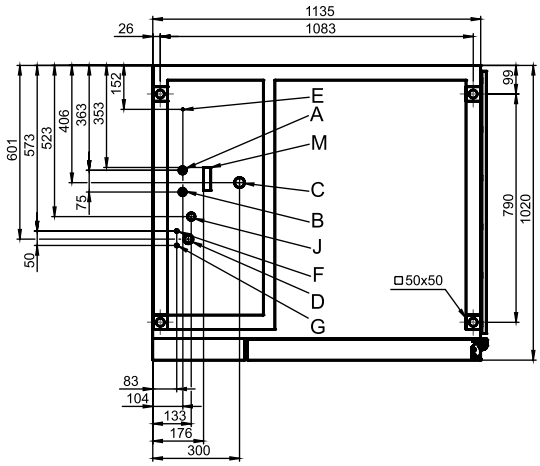

Detailed view of drain connection

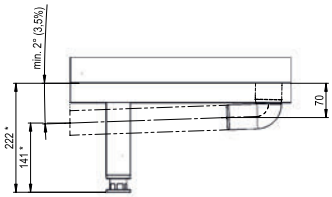

* Distance depends on how far the appliance feet are extended (max. +25 mm)

View from above with wall clearances

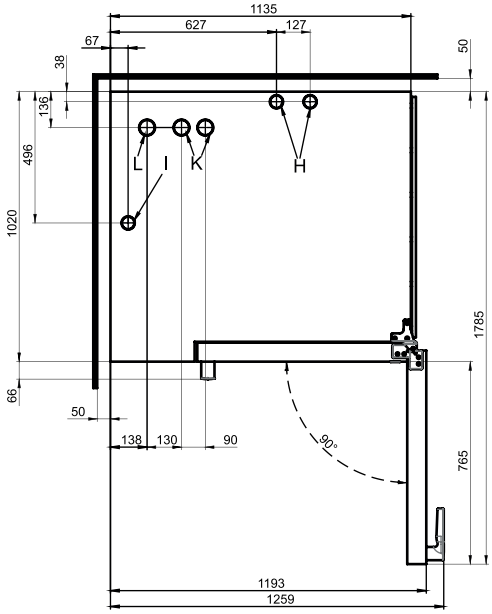

Meaning of labelled elements

A	Water connection Soft water G 3/4"
B	Water connection Hard water G 3/4"
C	Drain connection DN 50
D	Electrical connection
E	Equipotential bonding
F	Rinse-aid connection (optional)
G	Cleaning-agent connection (optional)
H	Air vent ∅ 50 mm
I	Ventilation port ∅ 50 mm
J	Gas connection
K	Exhaust outlet for convection burner ∅ 60.3 mm
L	Exhaust outlet for boiler burner ∅ 60.3 mm
M	Safety overflow 80 x 25 mm

Dimensions and connection points for C4 20.20 (disappearing door)

Front view

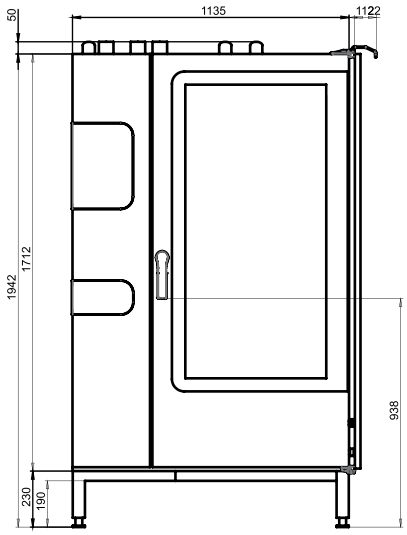

Connection points in appliance floor

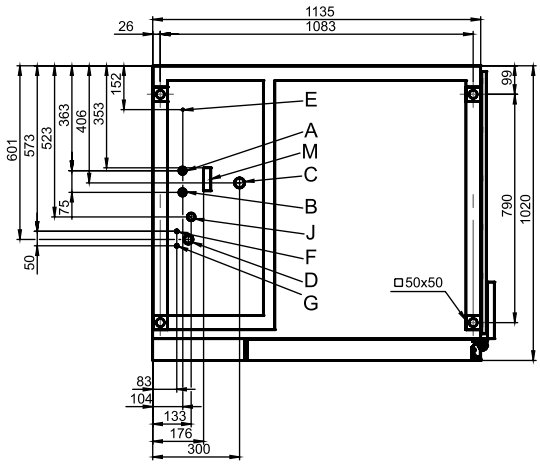

Detailed view of drain connection

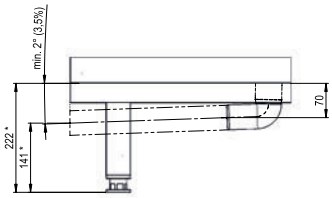

* Distance depends on how far the appliance feet are extended (max. +25 mm)

View from above with wall clearances

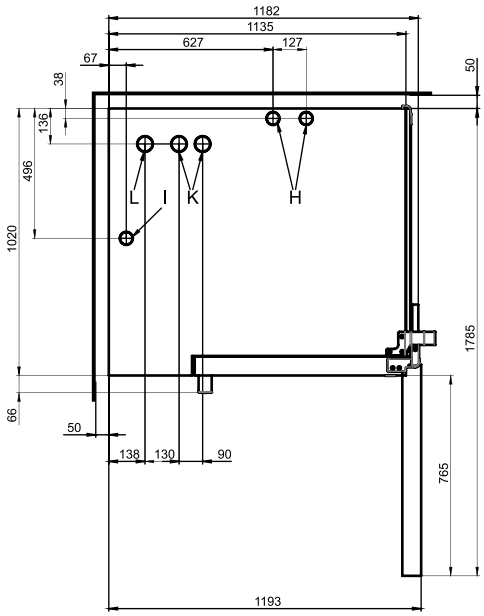

Meaning of labelled elements

A	Water connection Soft water G 3/4"
B	Water connection Hard water G 3/4"
C	Drain connection DN 50
D	Electrical connection
E	Equipotential bonding
F	Rinse-aid connection (optional)
G	Cleaning-agent connection (optional)
H	Air vent ∅ 50 mm
I	Ventilation port ∅ 50 mm
J	Gas connection
K	Exhaust outlet for convection burner ∅ 60.3 mm
L	Exhaust outlet for boiler burner ∅ 60.3 mm
M	Safety overflow 80 x 25 mm

10.2.14 Convotherm 4 20.20 injection gas appliance

Dimensions and connection points for C4 20.20 (right-hinged appliance door)

Front view

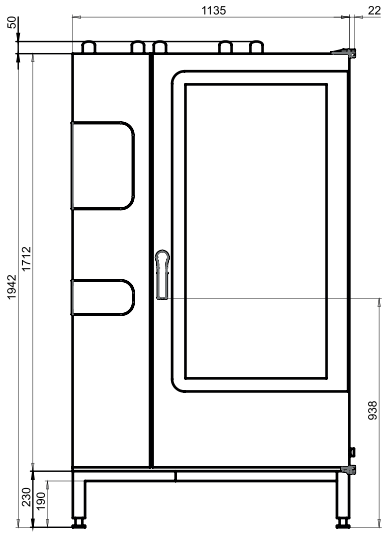

Connection points in appliance floor

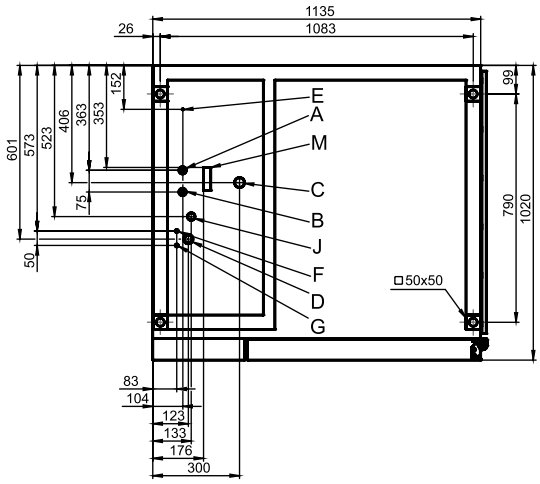

Detailed view of drain connection

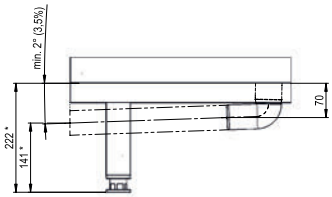

* Distance depends on how far the appliance feet are extended (max. +25 mm)

View from above with wall clearances

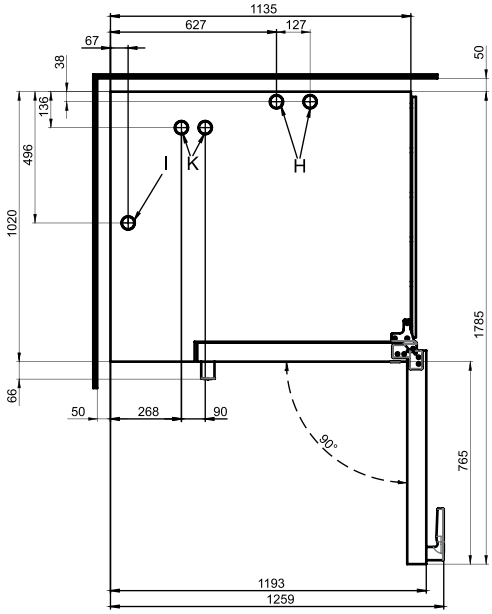

Meaning of labelled elements

A	Water connection Soft water G 3/4"
B	Water connection Hard water G 3/4"
C	Drain connection DN 50
D	Electrical connection
E	Equipotential bonding
F	Rinse-aid connection (optional)
G	Cleaning-agent connection (optional)
H	Air vent ∅ 50 mm
I	Ventilation port ∅ 50 mm
J	Gas connection
K	Exhaust outlet ∅ 60.3 mm
M	Safety overflow 80 x 25 mm

Dimensions and connection points for C4 20.20 (disappearing door)

Front view

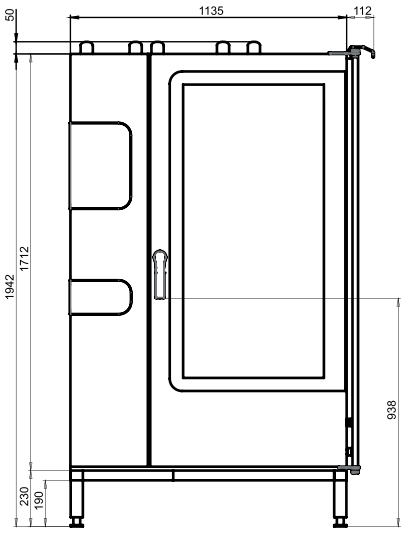

Connection points in appliance floor

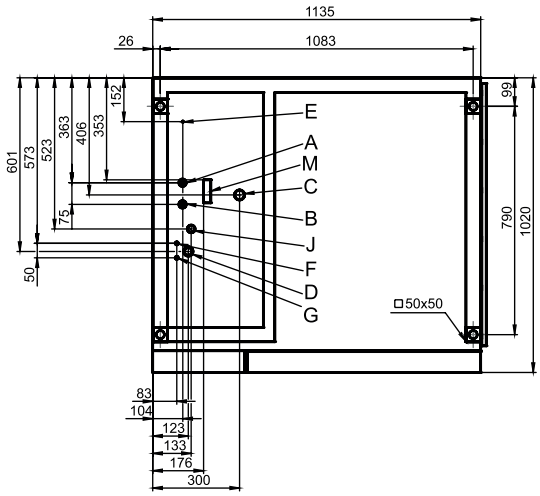

Detailed view of drain connection

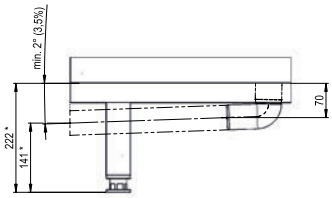

* Distance depends on how far the appliance feet are extended (max. +25 mm)

View from above with wall clearances

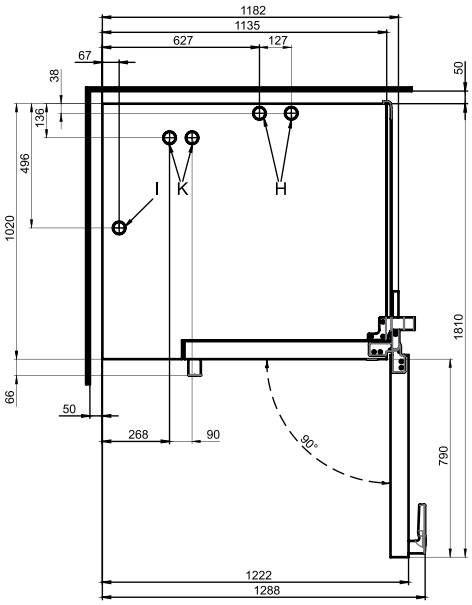

Meaning of labelled elements

A	Water connection Soft water G 3/4"
B	Water connection Hard water G 3/4"
C	Drain connection DN 50
D	Electrical connection
E	Equipotential bonding
F	Rinse-aid connection (optional)
G	Cleaning-agent connection (optional)
H	Air vent ∅ 50 mm
I	Ventilation port ∅ 50 mm
J	Gas connection
K	Exhaust outlet ∅ 60.3 mm
M	Safety overflow 80 x 25 mm

11 Checklists and completion of installation

Purpose of this chapter

This chapter contains the installation checklists and instructions for the owner's member of staff responsible for the appliance. The checklists are used to prove that the combi oven has been installed correctly. This chapter is intended for a qualified member of staff from an authorized service company who has overall responsibility for putting the appliance into service.

11.1 Checklist: moving, setting up and installing the appliance

Target reader

The following checklists are aimed at the qualified person employed by the authorized service company who has overall responsibility for putting the appliance into service (start-up engineer).

Action

As start-up engineer, enter the basic information and check the installation against the following checklists.

Check the box of those conditions that have been satisfied.

Basic information

Enter the basic information below:

Location of installed appliance (address)	
Serial number (as given on type plate)	
Part number (as given on type plate)	

Checklist

Check whether the following installation steps have been performed in accordance with requirements, and check the box of those conditions that have been satisfied.

Moving the appliance	Requirements met
'Moving the appliance to the installation location' on page 45	☐

Setting up the appliance	Requirements met
'Requirements for the installation location' on page 48	☐
'Unpacking' on page 53	☐
'Taking the appliance off the pallet' on page 57	☐
'Setting up a table-top unit on a work surface (standard model)' on page 60	☐
'Setting up a table-top unit on a work surface (marine model)' on page 62	☐
'Setting up a table-top unit on a stand (standard model)' on page 65	☐
'Setting up a table-top unit on a stand (marine model)' on page 67	☐
'Setting up a table-top unit on a wheeled stand' on page 71	☐
'Setting up a floor-standing unit on the floor (standard model)' on page 74	☐

'Setting up a floor-standing unit on the floor (marine model)' on page 75	☐
Installation	**Requirements met**
'Electrical installation' on page 76	☐
'Gas installation' on page 86	☐
'Water connection' on page 95	☐
'Installing the fully automatic oven cleaning system' on page 103 (optional)	☐
'Installing the grease collecting canister (applies to the Grill model only)' on page 108	☐

11.2 Checklist: Safety devices and warnings

Safety devices

Inspect the following safety devices. Check the box to confirm that the corresponding safety device is fitted and working properly.

Safety device	Fitted / Working properly
Cover is fitted	☐
Operating panel is fitted	☐
Appliance door has no scratches, cracks or dents	☐
Venting position of appliance door is working (for table-top units)	☐
Suction panel in place and properly secured	☐
Magnetic door switch: electric door sensor for appliance door is working	☐
Disconnection device working properly	☐
Gas shut-off device working properly	☐
Retaining device for stand on castors for restricting the range of movement	☐

Warning signs

Check the warning signs. Check the box to confirm that the warning signs are fitted.

Warning signs on the combi oven	Fitted
'Position and description of the warning signs on table-top units' on page 23	☐
'Position and description of the warning signs on floor-standing units' on page 25	☐

11.3 Checklist: Customer guidance and instruction

Parts of the customer documentation that must be read without fail

Before working with the combi oven, the user must familiarize himself/herself with the appliance and must have read and understood the following parts of the user manual before carrying out any work:

- the chapter 'Design and function'
- the chapter 'For your safety'
- the sections that describe the activity to be carried out

The user must also find out how to operate the software by reading the operating instructions and any guidance in the on-screen Help where applicable.

Tick the relevant box to confirm that you have directed the customer to the important chapters in the user manual, in the operating instructions and in the on-screen Help (easyTouch only).

	Customer informed
User manual	☐
Operating instructions	☐
On-screen Help (easyTouch only)	☐

11.4 Completion of the installation

Warranty

In order to be able to claim under the warranty for the combi oven, the appliance must be installed in accordance with the instructions in the installation manual by a qualified service engineer from an authorized service company. The manufacturer must be in receipt of a fully completed checklist before a warranty claim can be dealt with.

The warranty does not cover damage resulting from improper setup, installation, use, cleaning, use of cleaning agents, servicing, repair or descaling.

To extend the spare parts warranty to 2 years, you need to register the appliance on the manufacturer's homepage (www.convotherm.de) after installing the appliance.

Confirmation that appliance is ready for use

The appliance has been installed by a qualified member of staff of an authorized service company in accordance with the requirements given in this installation manual and with relevant local regulations.

Date _____

Name of start-up engineer (block capitals) _____

Signature of start-up engineer _____

Confirmation of guidance given to customer

The customer documentation has been handed to the customer / user. The customer has been informed of the important chapters as listed under 'Checklist' on page 188: customer guidance and instruction.

Date _____

Name of customer (block letters) _____

Signature of customer _____

Return of documentation

Please return the completed checklist to:

Convotherm Elektrogeräte GmbH
Welbilt
After Sales Service
Talstraße 35
82436 Eglfing
Germany

CONVOTHERM ELEKTROGERÄTE GMBH
TALSTRASSE 35, 82436 EGLFING | GERMANY, T +49(0)8847 67-0, F +49(0)8847 414
WWW.CONVOTHERM.COM

Combi oven
Convotherm 4

Serial no.
Item no.
Order no.

Additional technical documentation can be found in the download center at :
www.convotherm.com

Welbilt offers fully-integrated kitchen systems and our products are backed by KitchenCare® aftermarket parts and service. Welbilt's portfolio of award-winning brands includes **Cleveland™, Convotherm®, Delfield®, fitkitchen℠, Frymaster®, Garland®, Kolpak®, Lincoln™, Manitowoc®, Merco®, Merrychef® and Multiplex®.**

Bringing innovation to the table • **welbilt.com**

© 2018 Welbilt Inc. All rights reserved.

9761601_04 ENG 12/18